INSTALLATION RECOMMENDATION
HYDRONIC S3 – B 5 E IN THE FORD F 150



THIS INSTALLATION RECOMMENDATION APPLIES TO VEHICLES FROM MODEL YEAR 2016 WITH THE FOLLOWING MOTORISATION:

3.5 l cubic capacity / 6 cylinder in-line engine EcoBoost / 268 kW - 364 HP (HSN: 1028)

5.0 l cubic capacity / 8 cylinder V Ti-VCT engine / 290 kW - 395 HP (HSN: 1028)

WICHTIG für den elektrischen Anschluss der Hydronic S3 CS Heizgeräte: Bitte beachten Sie die Hinweise am Ende dieses Einbauvorschlages!

IMPORTANT NOTE for the electrical wiring of Hydronic S3 CS heaters: Please read the reference at the end of this installation recommendation!

A WORLD OF COMFORT

Eberspächer

CONTENTS

CHAPTER	CHAPTER DESCRIPTION	PAGE
1	Introduction	3-5
2	Preparation of the vehicle	6
3	Preliminary assembly	7-12
4	Installation	13-31
5	After installation	32
6	Parts Overview	33
	Initial commissioning	34-39
	Leaflet for the Customer	40

This installation recommendation documents the installation of the Hydronic S3 heater in a vehicle from model year 2016 with the following equipment:

- **with 2-zone automatic AirCon**
- **with fog lamps**
- **with daytime running lights**
- **with LED headlights**
- **with automatic gearbox**
- **with four-wheel drive 4 x 4 on demand**

not tested:

- **manual air-conditioning**

PLEASE NOTE!

This installation recommendation is valid for the above mentioned vehicle to the exclusion of all liability claims.
Deviating model years and/or deviating equipment may result in modifications to this installation recommendation.
It is therefore mandatory to check the feasibility of installing the heater in the vehicle before starting work.
All liability claims resulting from modifications to the vehicle are excluded.

Installation time: approx. 7 hours

1 INTRODUCTION

SPECIAL TEXT FORMATS, PRESENTATIONS AND PICTURE SYMBOLS

In this installation recommendation, special text formats and picture symbols are used to emphasise different contents. Please refer to the following examples for their meanings and appropriate action.

SPECIAL TEXT FORMATS AND PRESENTATIONS

- This dot (▪) denotes a list, which is started by a heading.
  - – If an indented dash (–) follows a “dot”, this list is a sub-section of the black dot.

PICTURE SYMBOLS

DANGER!

This information points out a potential serious or fatal danger. Ignoring this information can result in severe injuries.

➔ This arrow indicates the appropriate precaution to take to avert the danger.

CAUTION!

This information points out a dangerous situation for a person and / or the product. Ignoring this information can result in injuries to people and / or damage to equipment.

➔ This arrow indicates the appropriate precaution to take to avert the danger.

PLEASE NOTE!

These remarks contain recommendations for use and useful tips for the operation, installation and repair of the heater.

SAFETY INSTRUCTIONS FOR INSTALLATION AND REPAIR

DANGER!

Improper installation or repair of Eberspächer heaters can cause a fire or result toxic exhaust entering the inside of the vehicle.
This can cause serious and even fatal risks.

➔ Only authorised and trained persons may install the heater according to the specifications in the technical documents or repair it using original spare parts.

➔ Installation and repairs by unauthorised and untrained persons, repairs using non-original spare parts and without the technical documents required for installation and repair are dangerous and therefore are not permitted.

➔ Installation according to this installation recommendation may only be carried out in conjunction with the respective unit-related technical description, installation instructions, operating instructions and maintenance instructions.
This document must be carefully read through before / during installation and repair and followed throughout. Particular attention is to be paid to the official regulations, the safety instructions and the general information.

PLEASE NOTE!

- The relevant rules of sound engineering practice and any information provided by the vehicle manufacturer are to be observed during the installation and repair.
- When carrying out electric welding on the vehicle, the positive cable at the battery should be disconnected and earthed to protect the control box.

LIABILITY CLAIM / WARRANTY

Eberspächer does not accept any liability for defects and damage, which are due to installation or repair by unauthorised and untrained persons.
Compliance with the official regulations and the safety instructions is prerequisite for liability claims.
Failure to comply with the official regulations and safety instructions leads to exclusion of any liability of the heater manufacturer.

ACCIDENT PREVENTION

General accident prevention regulations / health and safety regulations and the corresponding workshop, company and operating safety instructions are to be observed.

1 INTRODUCTION

ADDITIONAL INFORMATION ON THE VALIDITY OF THE INSTALLATION RECOMMENDATION

The installation recommendation is valid for the vehicle with the engine and gearbox options listed in the following.

ENGINE AND GEARBOX OPTIONS

Cubic capacity	kW / HP	Gearbox
3.5 l EcoBoost	268 / 364	AT
5.0 l Ti-VCT V8	290 / 395	AT

AT = automatic transmission

PLEASE NOTE!

- The installation recommendation is not valid for right-hand drive vehicles.
- Vehicle models, engine types and feature options not listed in this installation recommendation, have not been tested.
  Installation according to this installation recommendation can still be possible.

INITIAL STARTUP OF THE HEATER OR FUNCTIONAL TEST

- After installation or carrying out a repair on the heater, the coolant circuit and the whole fuel supply system must be carefully vented. Comply with the instructions issued by the vehicle manufacturer.
- Open all heating circuits before the trial run (set the temperature controller to “hot”).
- During the heater trial run, all water and fuel connections must be checked for leaks and secure, tight fit.
- If faults occur while the heater is running, use a diagnostic unit to correct the cause of the fault.

PARTS REQUIRED FOR INSTALLATION

QUANTITY	DESIGNATION	ORDER NO.
1	Hydronic S3 - B 5 E	20 1993 05 00 00
1	Vehicle-specific installation kit	24 8000 35 00 16
EasyStart control unit as chosen:		
1	EasyStart Timer	22 1000 34 15 00
1	EasyStart Remote+	22 1000 34 17 00

SPECIAL TOOLS REQUIRED

- Necessary torque wrench
- Anti-corrosion agent
- Crimping tool
- Pliers for spring band clamps

TIGHTENING TORQUES

If no tightening torques are specified, tighten the screw connections according to the following table:

Part name	Tightening torques
Hex screw M6	10 $^{+1}$ Nm
Hex screw M8	20 $^{+2}$ Nm
Hex screw M10	45 $^{+2}$ Nm
Self-tapping M6 x 16 Torx screw	11 $^{+1}$ Nm
Screw M4	3 $^{+0.5}$ Nm
Screw M5 x 10	5 $^{+0.5}$ Nm
Screw M5 x 18	6.5 $^{+0.5}$ Nm
Pipe clip for exhaust pipe	7 $^{+1}$ Nm
Hose clip for water hose	3 $^{+0.5}$ Nm
Hose clip for combustion air pipe	5 $^{+0.5}$ Nm
Hose clip for fuel pipe	1 $^{+0.2}$ Nm

1 INTRODUCTION

INSTALLATION DRAWING

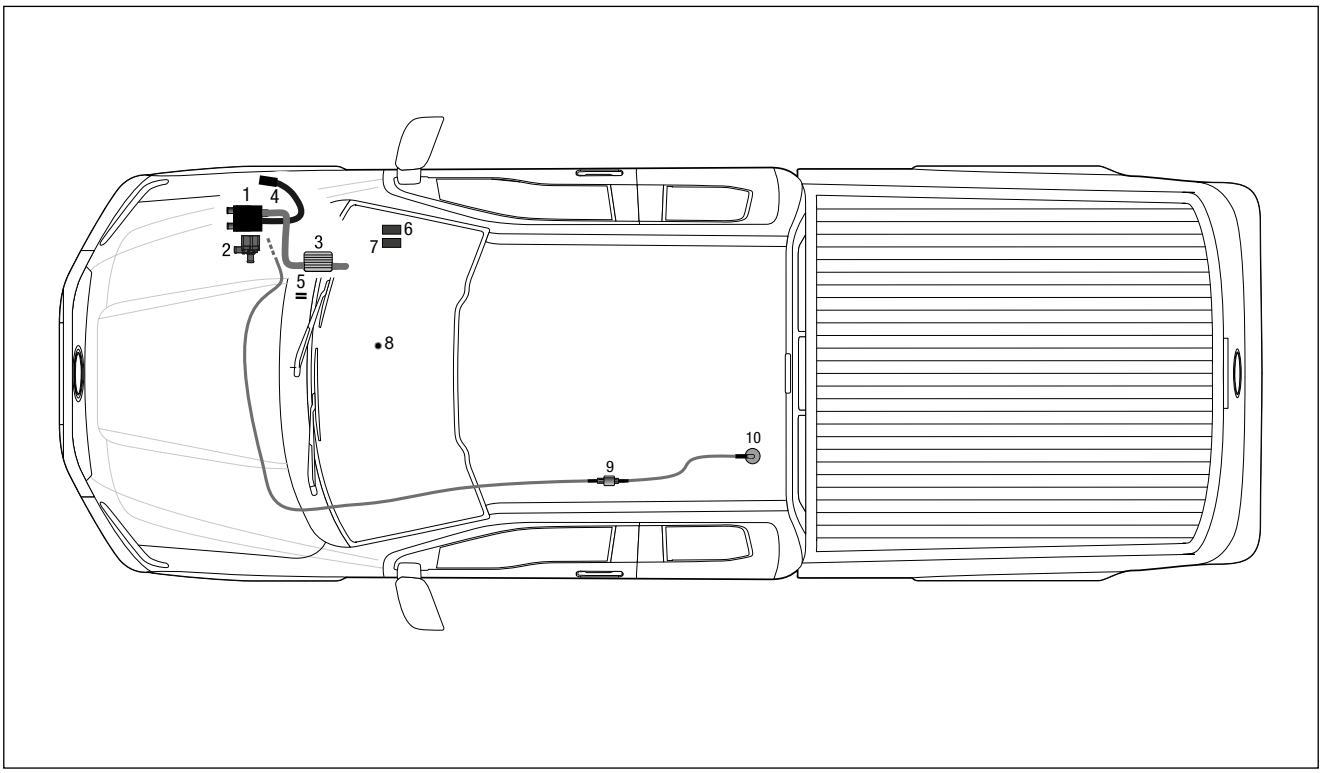

1 Heater Hydronic S3
2 Water pump
3 Exhaust pipe with exhaust silencer
4 Combustion air tube
5 Fuse holder
6 Fan control box “EasyFan”
7 Stationary part EasyStart Remote+
8 Button EasyStart Remote+
9 Metering pump
10 Fuel tank extractor

2 PREPARATION OF THE VEHICLE

PREPARATORY WORK ON THE VEHICLE

- Disconnect the battery
- Remove the aircon control
- Remove glove compartment
- Remove front right-hand wheel
- Remove right-hand, front wheel arch liner
- Remove lower gearbox cowling
- Remove tank according to the manufacturer's instructions
- Depressurise the cooling system
- Drain coolant into a clean container

INSTRUCTIONS FOR REMOVING THE AIRCON CONTROL
(see photos 1 and 2)

Take the upper shelf up and out of the instrument panel.

Unscrew the two fastening screws from the cover of the radio / aircon control.



Fig. 1
① Take shelf out of the instrument panel
② 2 x fastening screws

Use a plastic wedge to release the cover of the radio/aircon control out to the back of the instrument panel.
Disconnect the electric plug from the aircon control.



Fig. 2
① Take cover of radio/aircon control out to the back of the instrument panel

3 PRELIMINARY ASSEMBLY

PREPARE HEATER
(see photos 3 and 4)

Mount the angled water connection socket to the heater as shown, see “Assembly Steps”.

Remove the duplicate nameplate from the heater.

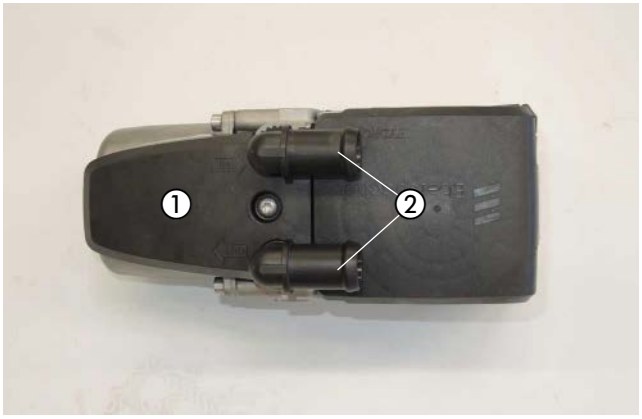

Fig. 3
① Heater
② Mount elbow connection

Installation steps

- Grease the O-ring (5) and insert in the groove at the connection socket.
- Fit the connection socket (3 or 4) in the cut-outs of the sensor cover (2). The collar of the connection socket is above the cover.
- Position the connection socket with the toothed edge in the sensor cover and fix accordingly.
- Fit the sensor cover on the heater with the connection socket pointing forwards.
- Press the connection socket completely into the corresponding holes on the heat exchanger.
- Adjust the direction for the angled connection socket:
  – Raise the sensor cover up to the collar of the connection socket
  – Turn the connection socket in the required direction
  – Push the sensor cover down and readjust the position of the connection socket so that the toothed edges engage again
- Fasten sensor cover with M5 x 18 screw (1)
  (tightening torque $6.5^{+0.5}$ Nm).

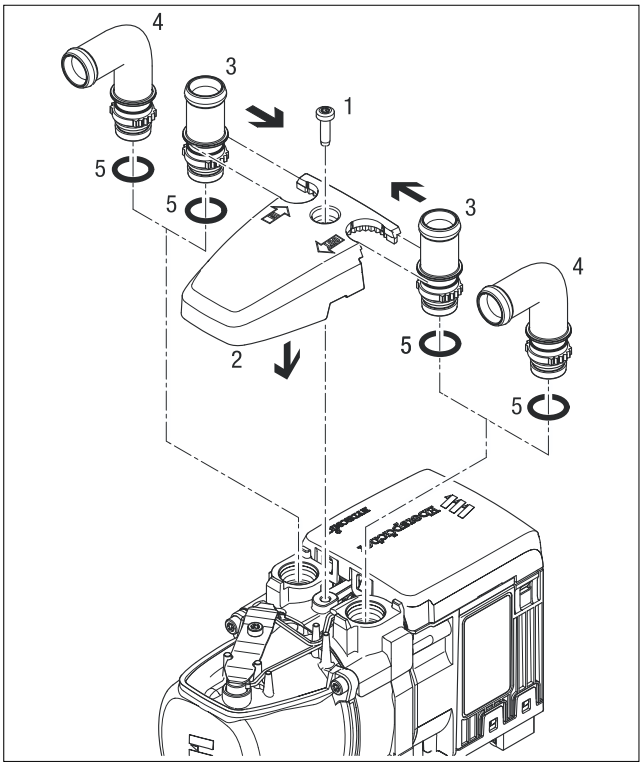

Fig. 4

1 M5 x 18 screw
2 Sensor cover
3 Connection socket, straight
4 Angled connection socket
5 O-ring

3 PRELIMINARY ASSEMBLY

ADHERE DUPLICATE NAMEPLATE
(see photo 5)

Fit the duplicate nameplate to the B-pillar on the passenger side as shown.

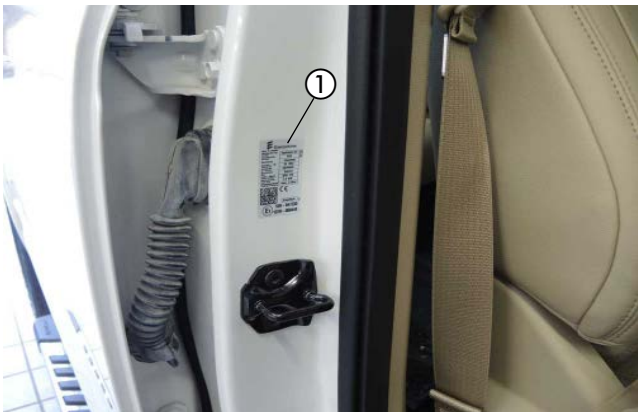

Fig. 5
① Fit duplicate nameplate

PREPARE HEATER BRACKET
(see photo 6)

Insert the exhaust grommet in the existing drilled hole in the heater bracket as shown.

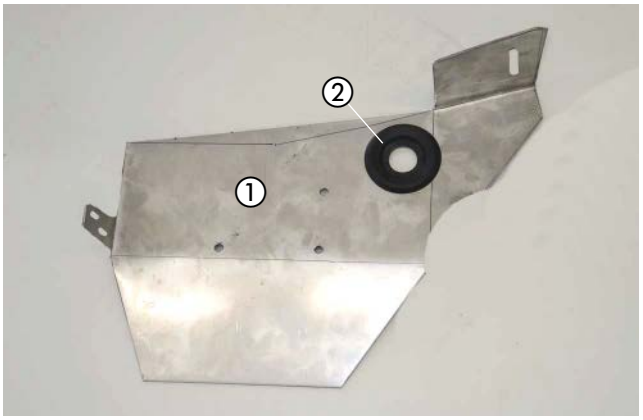

Fig. 6
① Unit bracket
② Insert exhaust grommet

PREMOUNT WATER PUMP
(see photo 7)

Insert the water pump in the water pump holder.

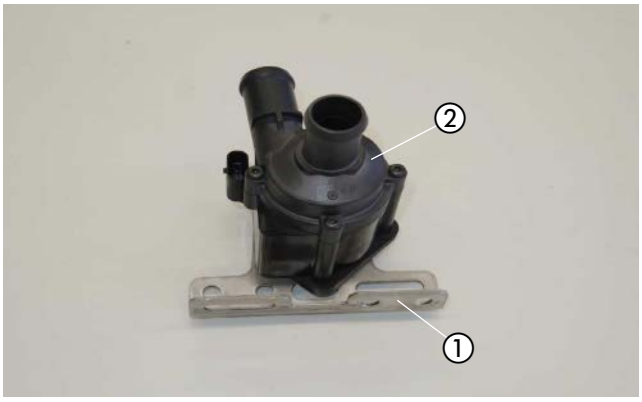

Fig. 7
① Holder, water pump
② Water pump

3 PRELIMINARY ASSEMBLY

PREPARE WATER HOSES
(see photo 8)
For vehicles with 3.5l 6-cylinder engine!

The water hoses are already prepared as shown.

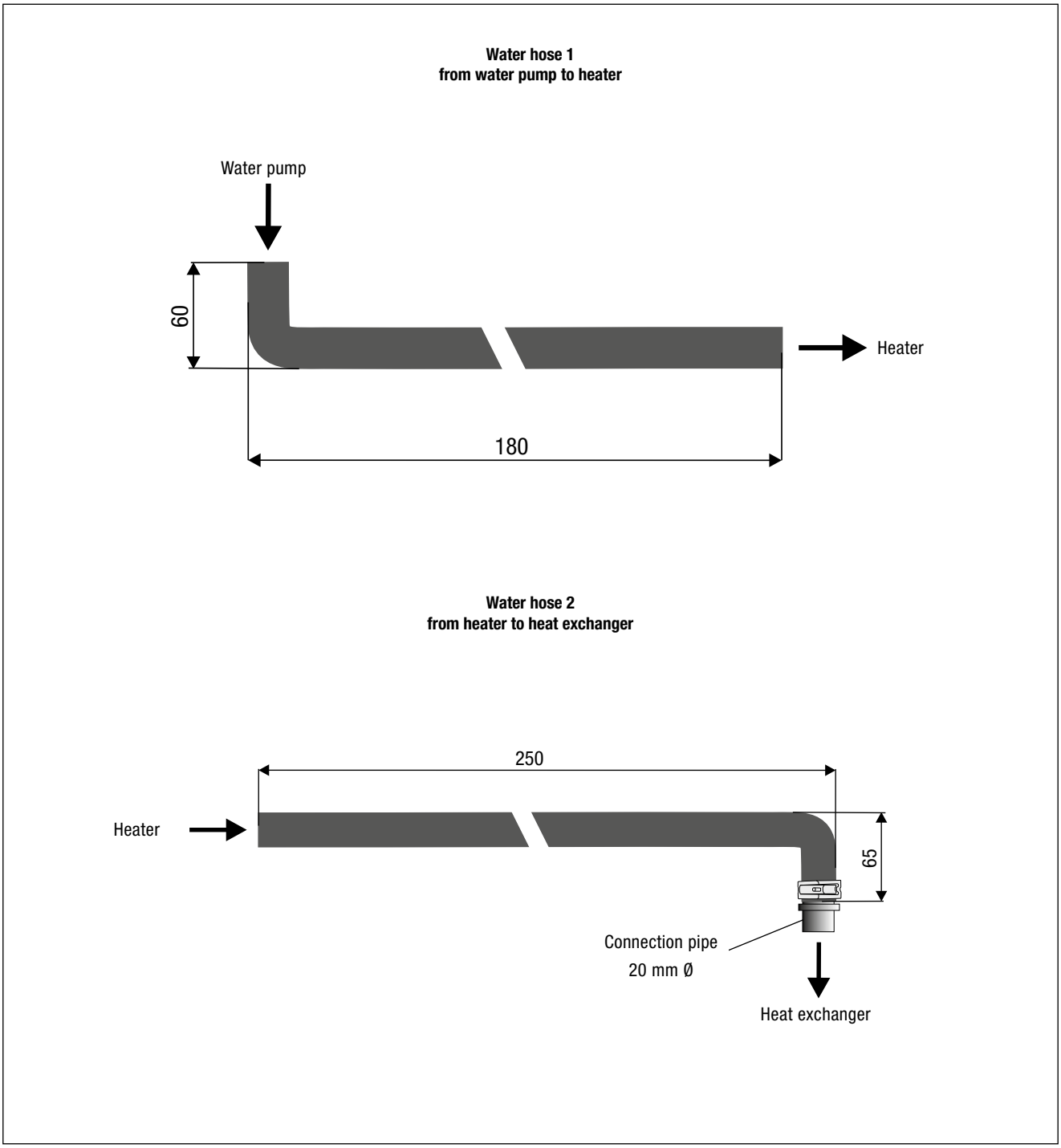

Fig. 8

3 PRELIMINARY ASSEMBLY

PREPARE WATER HOSES

(see photo 9)

For vehicles with 5.0l V8 engine!

The water hoses are already prepared as shown.

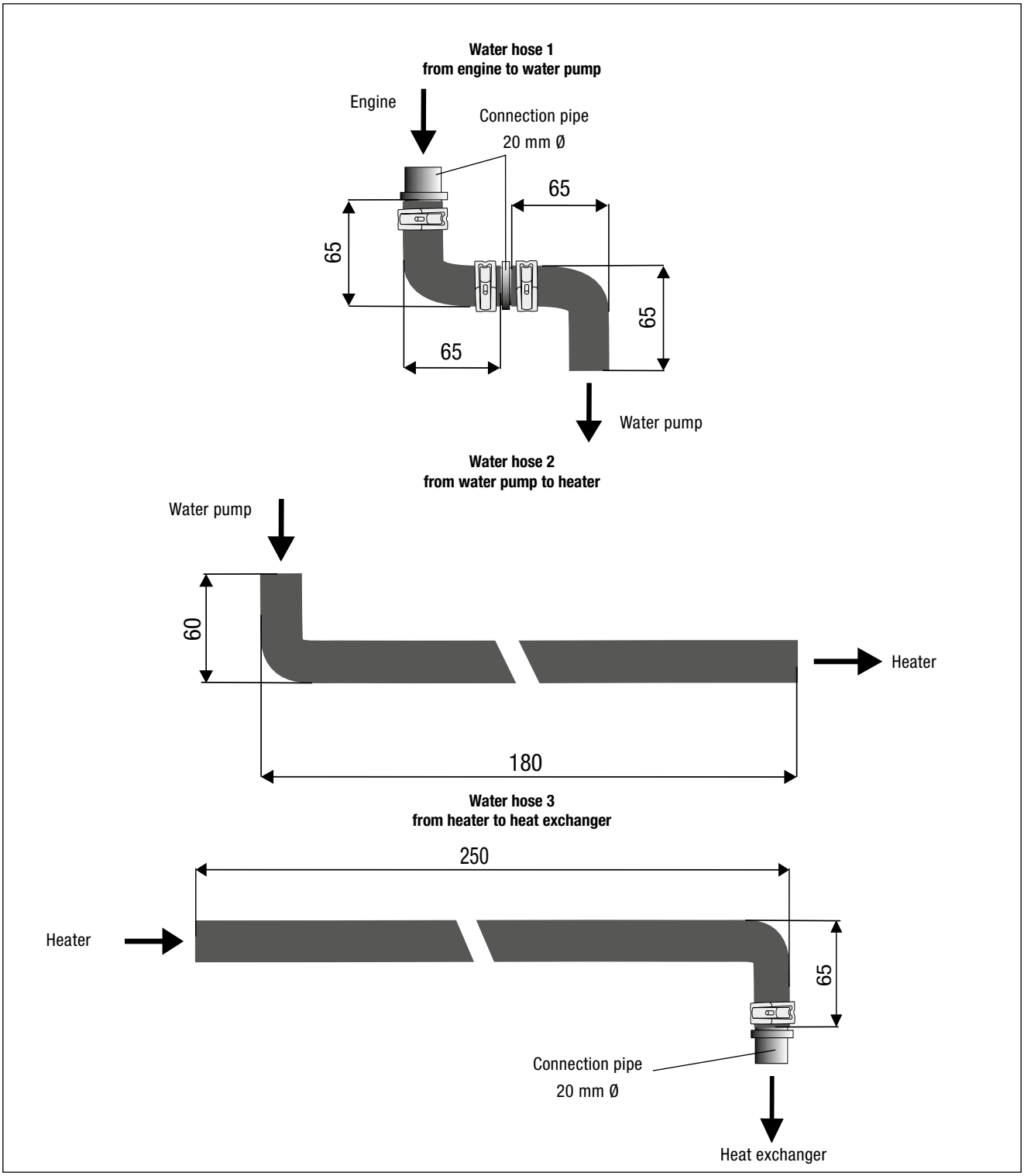

Fig. 9

3 PRELIMINARY ASSEMBLY

PREPARE EXHAUST SILENCER
(see photo 10)

Prepare the already premounted exhaust silencer for subsequent installation.

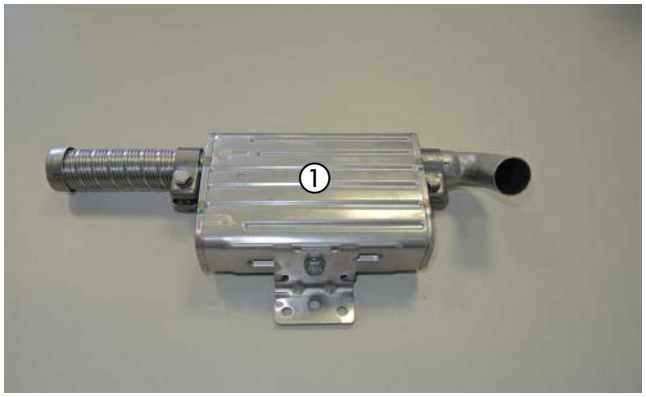

Fig. 10
① Premounted exhaust silencer

PREMOUNT HEATER BRACKET
(see photos 11 and 12)

Fasten the heater bracket to the heater with three M6 x 12 screws.

Use a clamp to fasten the exhaust pipe elbow to the exhaust connection of the heater and align as shown.

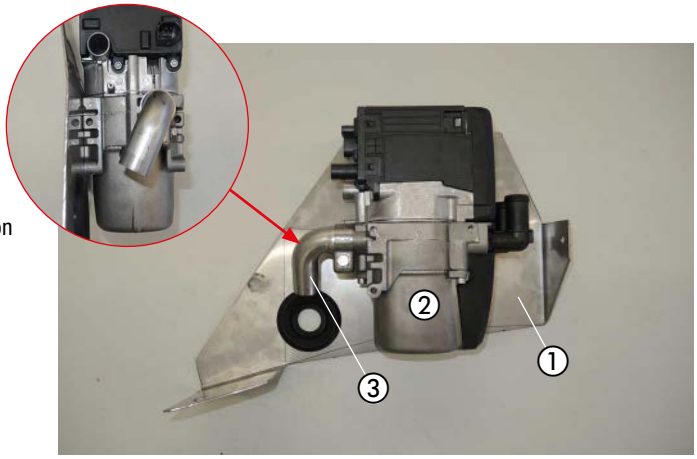

Fig. 11
① Heater bracket
② Heater
③ Mount exhaust pipe elbow

Connect water hose 1 to the water inlet connection of the heater and align as shown.

Connect water hose 2 to the water outlet connection of the heater and align as shown.

Connect the combustion air pipe to the heater using a 16 - 25 mm Ø hose clip.

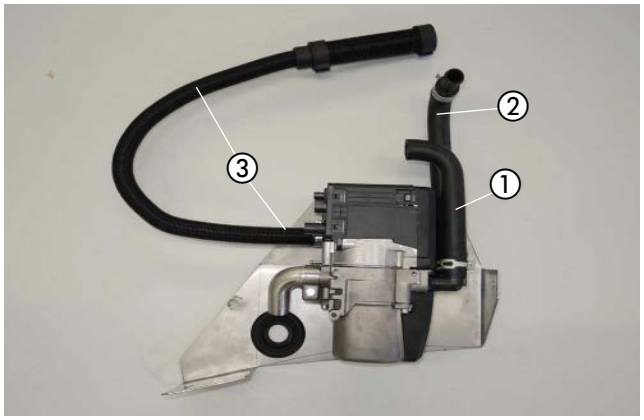

Fig. 12
① Mount water hose 1
② Mount water hose 2
③ Connect combustion air pipe

3 PRELIMINARY ASSEMBLY

PREMOUNT METERING PUMP
(see photo 13)

Insert the metering pump in the rubber holder as shown in the photo.

Fasten the Z-angle holder (22.9000.50.7901) to the rubber holder, offset by 15° as shown, using an M6 x 25 screw, a B6 body washer and an M6 nut.

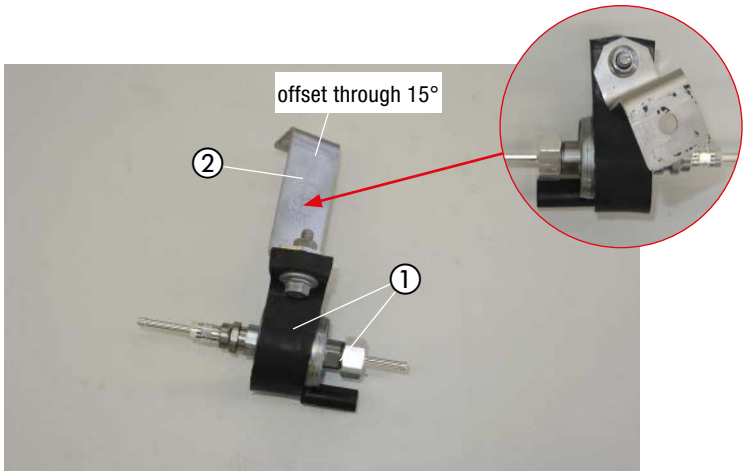

Fig. 13
① Insert metering pump in rubber holder
② Mount 90° angle holder (22.9000.50.7901)

PREPARE FUEL PIPE (SUCTION LINE)
(see photo 14)

Prepare the premounted fuel pipe (suction line) with 105° fuel hose elbow and 3.5 x 3 mm Ø fuel hose for subsequent installation.



Fig. 14
① Fuel pipe (suction line)

PREPARE FUEL PIPE (PRESSURE LINE)
(see photo 15)

Prepare the fuel pipe (pressure line) with 4.5/3.5 mm Ø adapter and 105° fuel hose elbow for subsequent installation.

Mount the 4.5/3.5 mm Ø adapter to the fuel connection of the heater.



Fig. 15
① Mount fuel pipe (pressure line) with 4.5/3.5 mm Ø adapter
② 105° fuel hose elbow

3 PRELIMINARY ASSEMBLY

PREPARE FUSE BLOCK
(see photo 16)

Prepare the premounted holder with fuse block and diagnostic connector for subsequent installation.

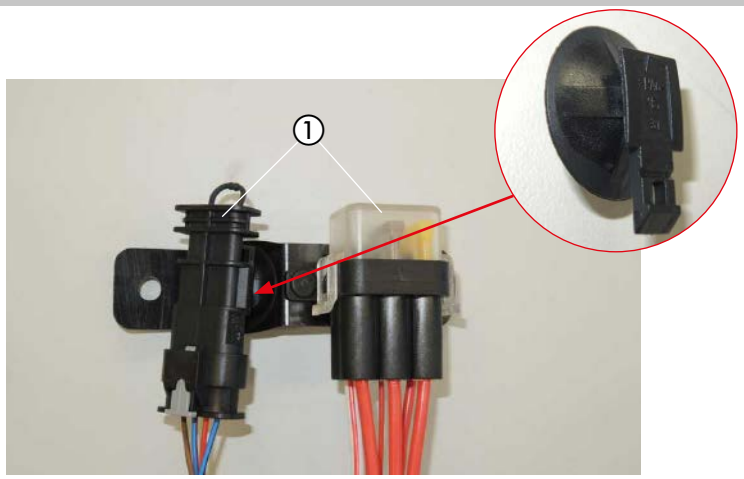

Fig. 16
① Fuse block and plug holder with diagnostic connector already premounted to holder

PREMOUNT STATIONARY PART OF THE EASYSTART REMOTE+ AND EASYFAN FAN CONTROL BOX
(see photo 17 and 18)

Prepare the bracket 22 9000 50 65 04 as shown in the figure.

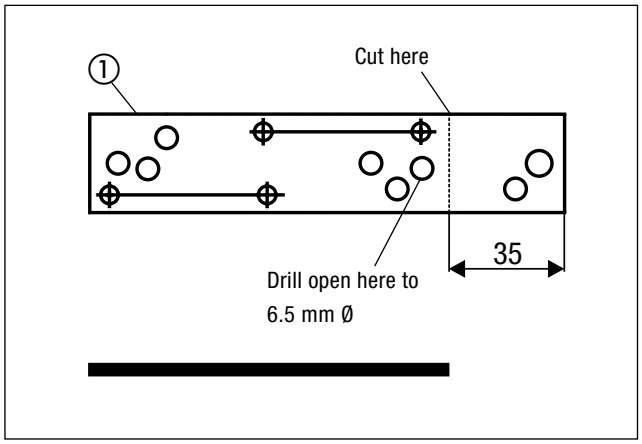

Fig. 17
① Prepare holder for stationary part of the EasyStart Remote+ and the EasyFan fan control box

Mount the stationary part of the EasyStart Remote+ and the EasyFan fan control box to the prepared holder using two M4 x 10 screws as shown.

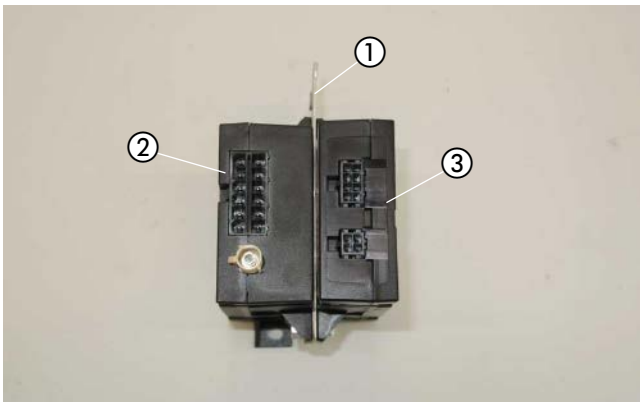

Fig. 18
① prepared holder 22 9000 50 65 04
② Stationary part EasyStart Remote+
③ Fan control box “EasyFan”

4 INSTALLATION

PREPARE THE INSTALLATION POSITION
(see photos 19 and 20)

The installation position is on the ladder frame on the right side of the vehicle.

Loosen the M6 fastening screw of the heat shield on the right side of the vehicle above the ladder frame.



Fig. 19
① Loosen fastening screw of the heat shield

Take the vehicle lead harness out of the holder.

The existing oblong hole in the axle support and the M6 fastening screw of the heat shield act as fastening points for the heater bracket.

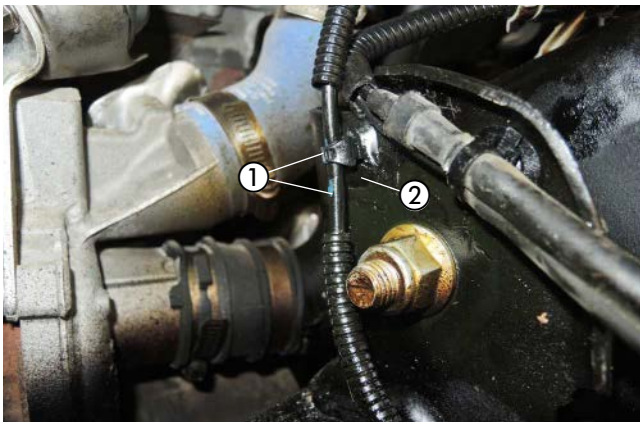

Fig. 20
① Take the lead harness out of the holder
② Existing oblong hole in axle support

INSTALL HEATER
(see photo 21)

Mount the premounted bracket to the heater using the fastening screw of the heat shield.

Push a 10 mm Ø rubberised clip onto the vehicle lead harness.

Fit the heater bracket together with the 10 mm Ø rubberised clip into the existing oblong hole of the axle support using an M6 x 16 screw.

⚠ CAUTION!
In vehicles with 5.0l V8 engine, maintain an adequate distance to adjacent engine parts!

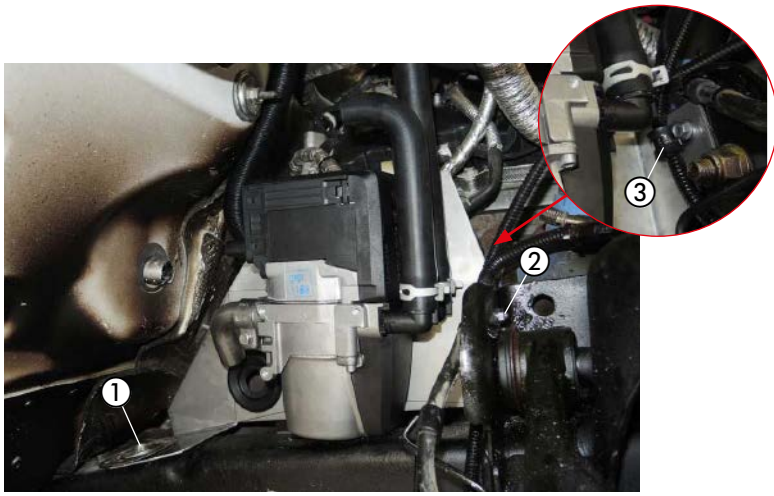

Fig. 21
① Fit heater bracket with fastening screw
② Fit M6 x 16 screw in existing oblong hole
③ Rubberised clip Ø 10 mm

4 INSTALLATION

MOUNT SUPPORTING STRUT
(see photos 22 to 24)

Slot the prepared supporting strut with the threaded plate in the oblong hole on the right-hand outer side of the ladder frame.

Turn the supporting strut with threaded plate up towards the heater so that the threaded plate can be fastened in the ladder frame.

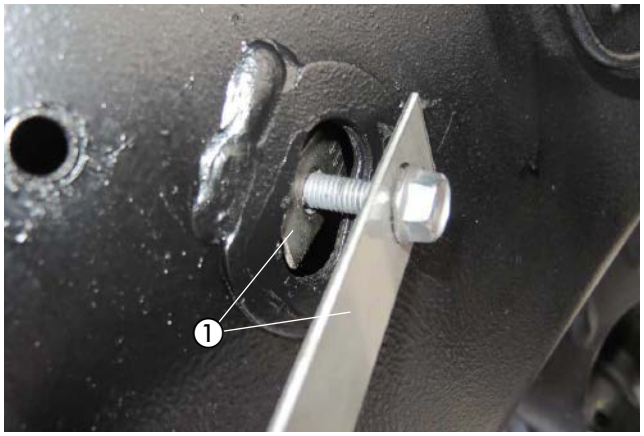

Fig. 22
① Supporting strut with threaded plate

For vehicles with 3.5l 6-cylinder engine

Fasten the supporting strut to the existing hole in the heater jacket using an M6 x 12 screw.

Fasten the lower M6 x 30 screw to the oblong hole, making sure that the threaded plate fits properly (square end must slot into the oblong hole).

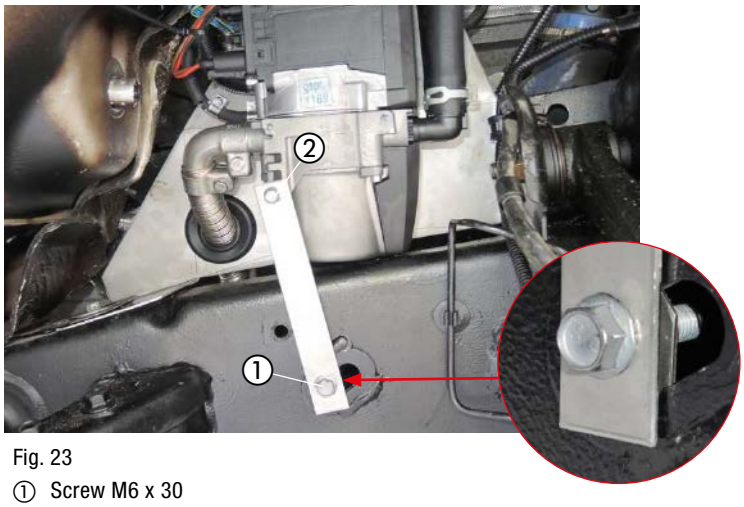

Fig. 23
① Screw M6 x 30
② Screw M6 x 12

For vehicles with 5.0l V8 engine

Fasten the supporting strut to the existing hole in the heater jacket using an M6 x 12 screw.

Fasten the lower M6 x 30 screw to the oblong hole, making sure that the threaded plate fits properly (square end must slot into the oblong hole).

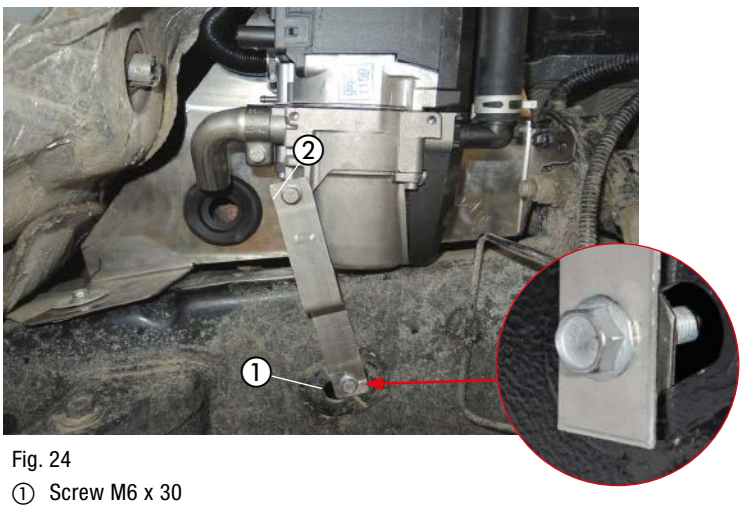

Fig. 24
① Screw M6 x 30
② Screw M6 x 12

4 INSTALLATION

LAY COMBUSTION AIR PIPE
(see photo 25)

Take the combustion air pipe up into the protected area and secure with cable ties.

⚠ CAUTION!
Lay the combustion air silencer so that only clean, dry combustion air can be drawn in through the heater.

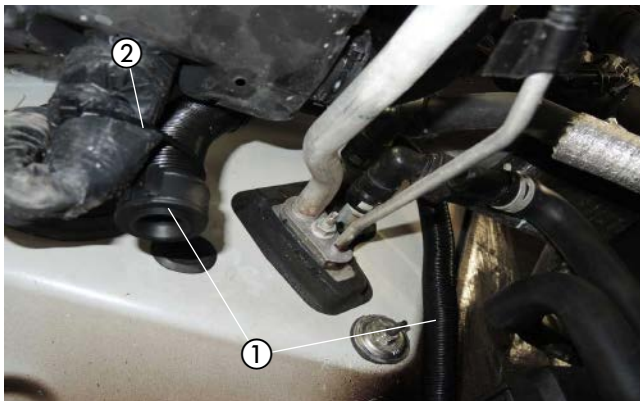

Fig. 25
① Lay combustion air pipe

INSTALL WATER PUMP
(see photos 26 and 27)

For vehicles with 3.5l 6-cylinder engine

Mount the prepared water pump to the existing stud bolt of the engine partition below the aircon pipes using an M6 nut.

The discharge end points to the front and the intake end points to the left.

Connect water hose 1 to the discharge end of the water pump.

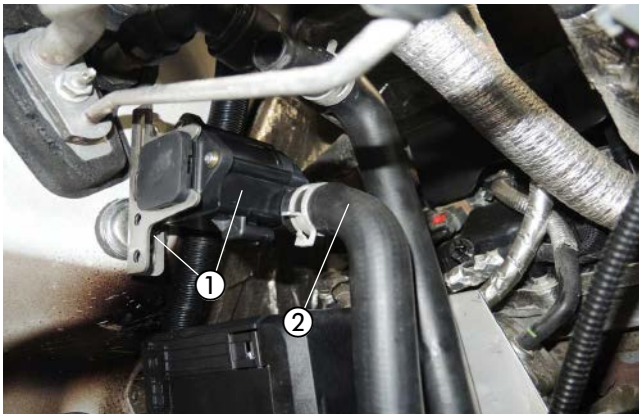

Fig. 26
① Install water pump
② Connect water hose 1

For vehicles with 5.0l V8 engine

Mount a bracket (9301) to the existing stud bolt of the engine partition below the aircon pipe using an M6 nut as shown.
Fasten the prepared water pump to the mounted bracket (9301) using an M6 x 12 screw and an M6 nut.

The discharge end points to the front and the intake end points to the left.

Connect water hose 1 to the discharge end of the water pump.



Fig. 27
① Mount the holder
② Install water pump
③ Connect water hose 1

4 INSTALLATION

CUT WATER FLOW HOSE
(see photos 28 and 29)

For vehicles with 3.5l 6-cylinder engine

Cut the water flow hose from the engine to the heat exchanger (the bottom water hose at the heat exchanger) according to the dimensions shown.

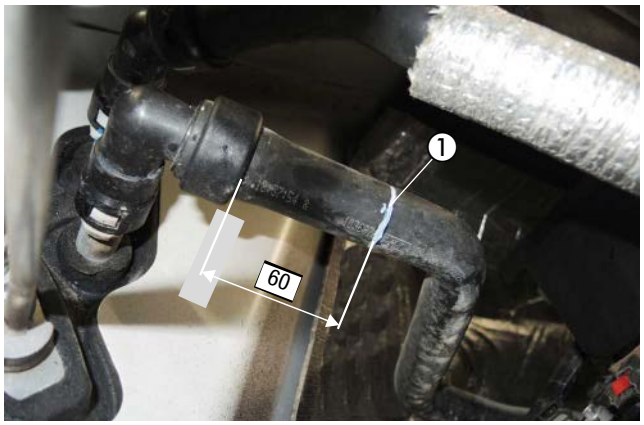

Fig. 28
① Cut water flow hose

For vehicles with 5.0l V8 engine

Remove the insulation on the water flow hose from the engine to the heat exchanger (the lower water hose at the heat exchanger) and cut according to the dimensions shown.

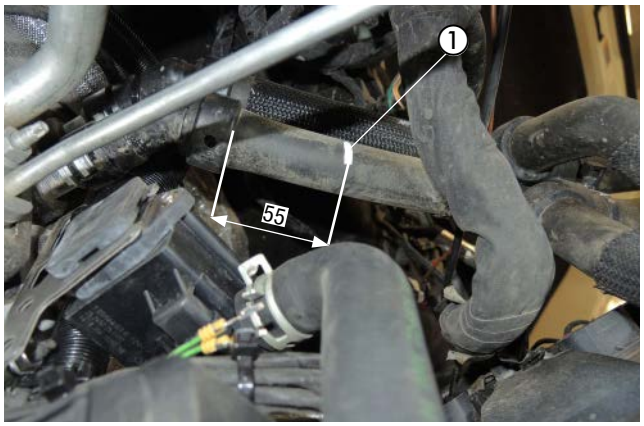

Fig. 29
① Cut water flow hose

CONNECT AND LAY WATER HOSES
(see photos 30 and 35)

For vehicles with 3.5l 6-cylinder engine

Connect the water hose from the engine to the intake end of the water pump using a 20-32 mm Ø hose clip.

Connect water hose 2 with the 20 mm Ø connection pipe at the water hose to the heat exchanger using a 20-32 mm Ø hose clip.

Fix the water hose from the engine and water hose 2 using two rotatable hose holders.

⚠ CAUTION!
Secure all hose connections with hose clips.
Protect the water hoses against chafing and use cable ties to secure in suitable positions.

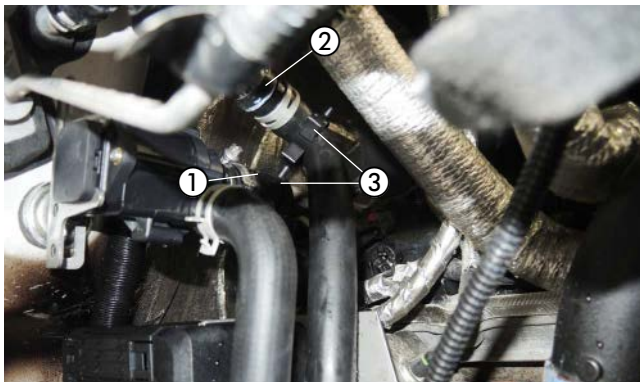

Fig. 30
① Connect water hose from engine
② Connect water hose 2
③ Two rotatable hose holders

4 INSTALLATION

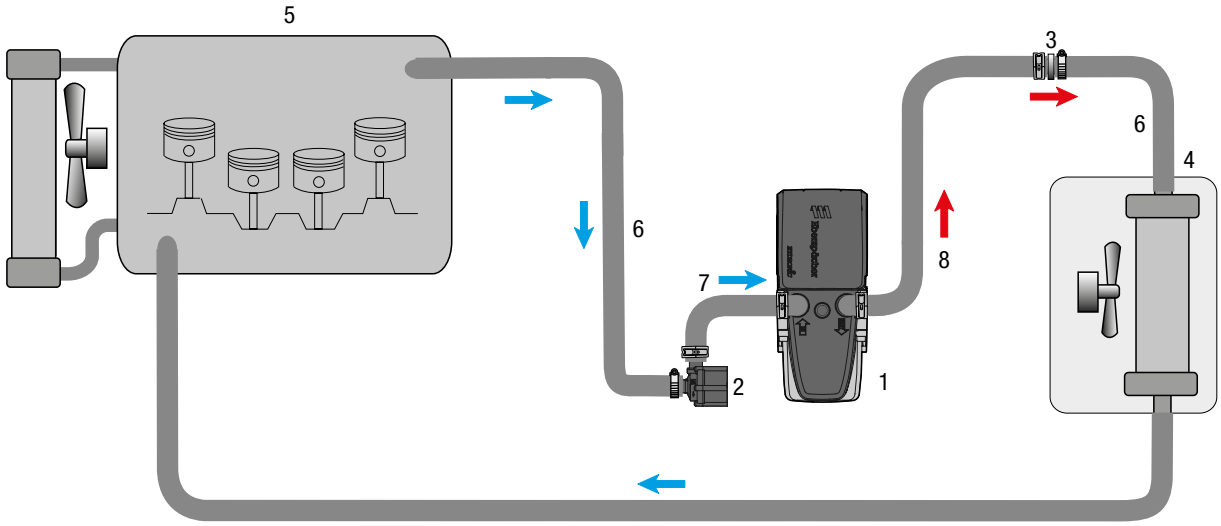

1 - Heater Hydronic S3
2 - Water pump
3 - Connection pipe 20 mm Ø
4 - Vehicle heat exchanger
5 - Engine
6- Vehicle water hose from engine
7- Water hose 1
8- Water hose 2
- Spring band clip 26 mm Ø
- Hose clip, 20 – 32 mm Ø

Fig. 31

4 INSTALLATION

For vehicles with 5.0l V8 engine

Connect water hose 2 with a spring band clamp to the discharge end of the water pump.

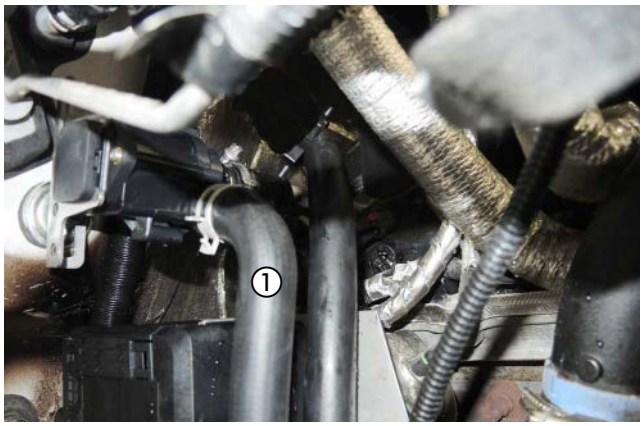

Fig. 32
① Connect water hose 2

Connect water hose 1 with a spring band clamp to the intake end of the water pump and connect to the cut through piece of the water flow hose from the engine using a 20 - 32 mm Ø hose clip.
Connect water hose 3 at the cut through piece of the water flow hose to the heat exchanger with a 20 - 32 mm Ø hose clip.
Secure water hose 1 with two rotatable line holders at the piece of the water flow hose to the heat exchanger as shown.

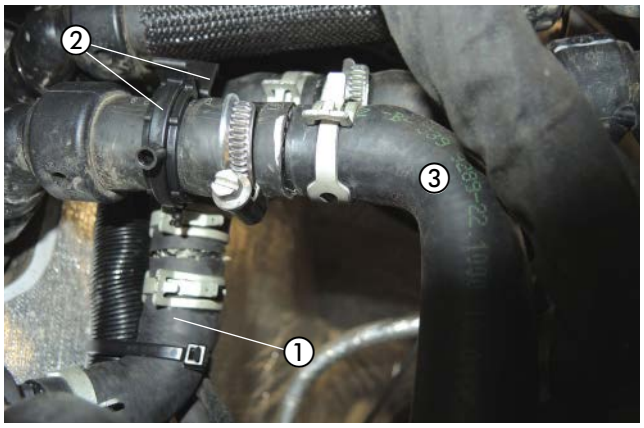

Fig. 33
① Connect water hose 1
② 2 x rotatable line holders
③ Connect water hose 3

Secure the vehicle's two water hoses with four rotatable line holders as shown.

⚠ CAUTION!
Secure all hose connections with hose clips.
Protect the water hoses against chafing and use cable ties to secure in suitable positions.

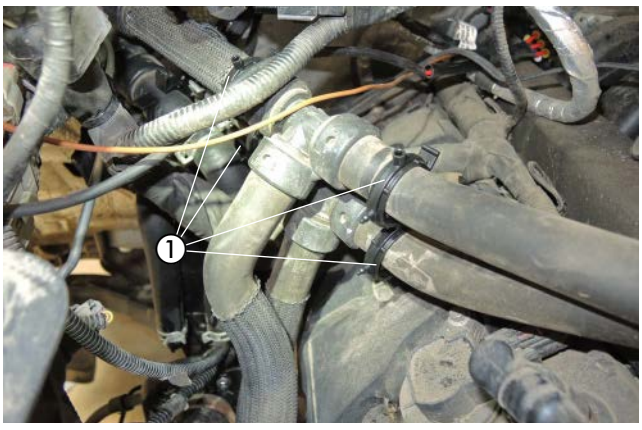

Fig. 34
① 4 x rotatable line holders

4 INSTALLATION

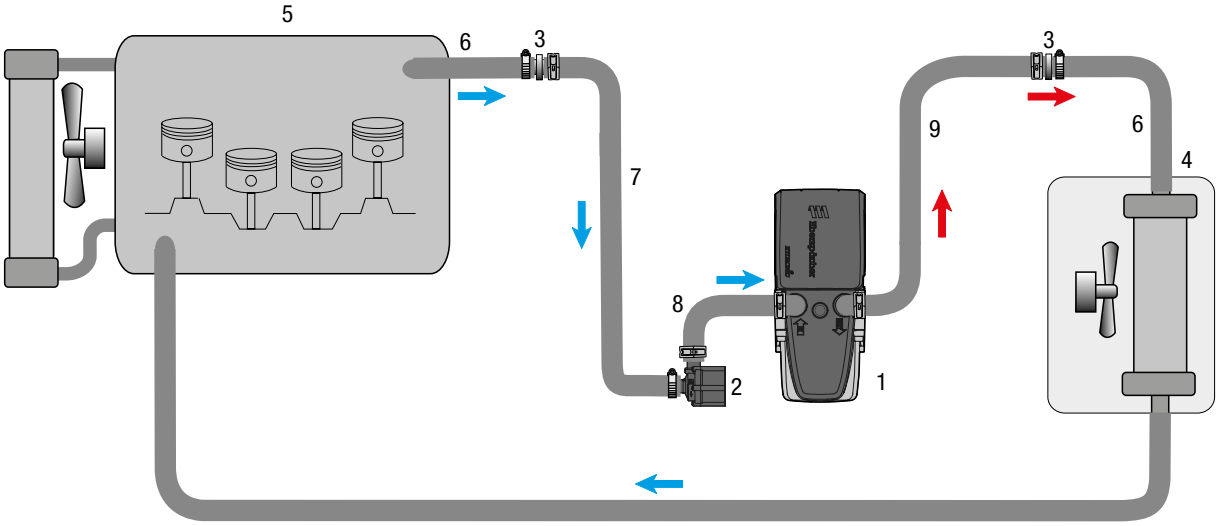

1 - Heater Hydronic S3
2 - Water pump
3 - Connection pipe 20 mm Ø
4 - Vehicle heat exchanger
5 - Engine
6- Vehicle water hose from engine
7- Water hose 1
8- Water hose 3
9- Water hose 2
- Spring band clip 26 mm Ø
- Hose clip, 20 – 32 mm Ø

Fig. 35

4 INSTALLATION

MOUNT EXHAUST SYSTEM
(see photos 36 to 44)

For vehicles with 3.5l 6-cylinder engine

Fasten the Z-angle holder with an M6 x 12 screw to the existing 7 mm Ø hole in the stabiliser support and align as shown.

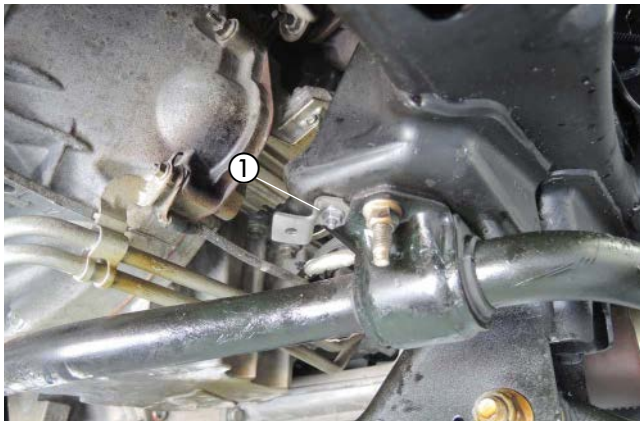

Fig. 36
① Mount Z-angle holder

Mount the exhaust silencer to the /-angle holder with an M6 x 12 screw.

Shape the exhaust pipe end as shown.

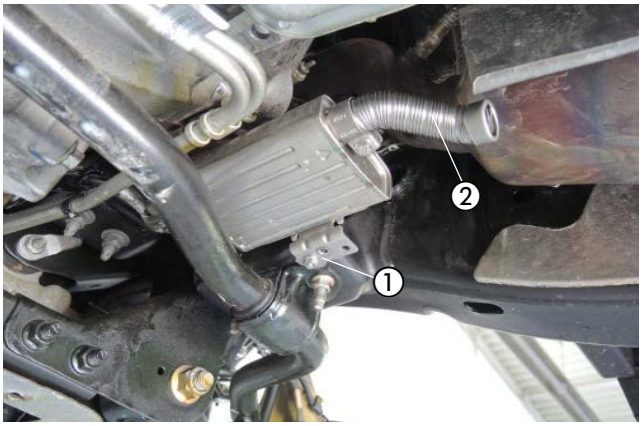

Fig. 37
① Mount the exhaust silencer
② Shape exhaust pipe end

Fasten the exhaust pipe to the exhaust pipe elbow of the exhaust silencer with a clamp and take it to the heater.

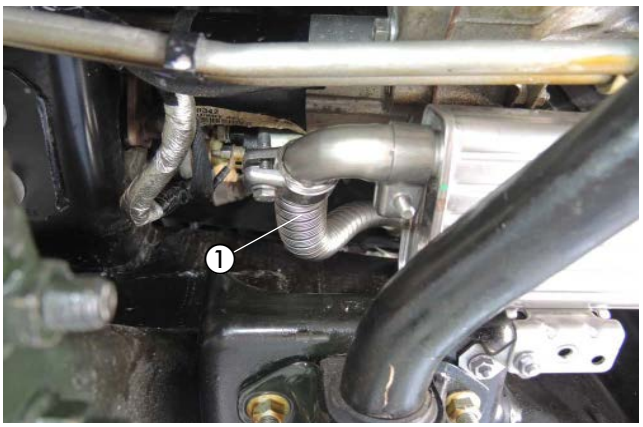

Fig. 38
① Connect exhaust pipe to exhaust pipe elbow of exhaust silencer

4 INSTALLATION

Take the exhaust pipe through the grommet and connect with a clamp to the ready mounted exhaust pipe elbow of the heater.

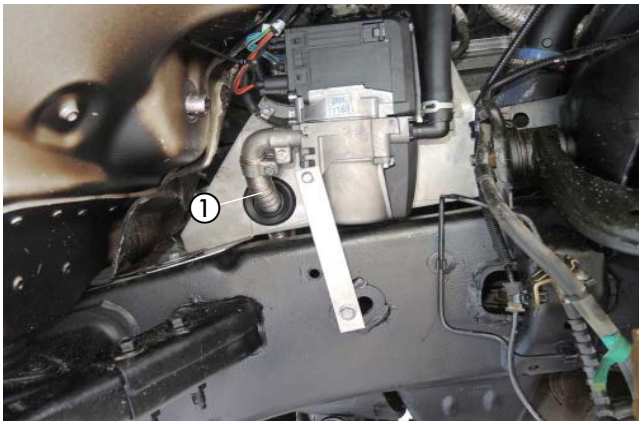

Fig. 39
① Connect exhaust pipe to exhaust pipe elbow of heater

⚠ CAUTION!
When laying the exhaust pipes, ensure they are at a sufficient distance from adjacent body components.

For vehicles with 5.0l V8 engine

Fasten the bracket (9502) with an M6 x 12 screw to the existing 7 mm Ø hole in the stabiliser support and align as shown.



Fig. 40
① Mount the holder

Loosen the M6 x 12 screw of the L-bracket on the premounted exhaust silencer.
Position the L-bracket together with an M6 x 16 screw in the right-hand 7 mm Ø hole on the exhaust silencer as shown and fasten with the M6 x 12 screw.
Remove the exhaust pipe elbow at the exhaust intake connection of the exhaust silencer after loosening the clamp.
This is no longer needed.

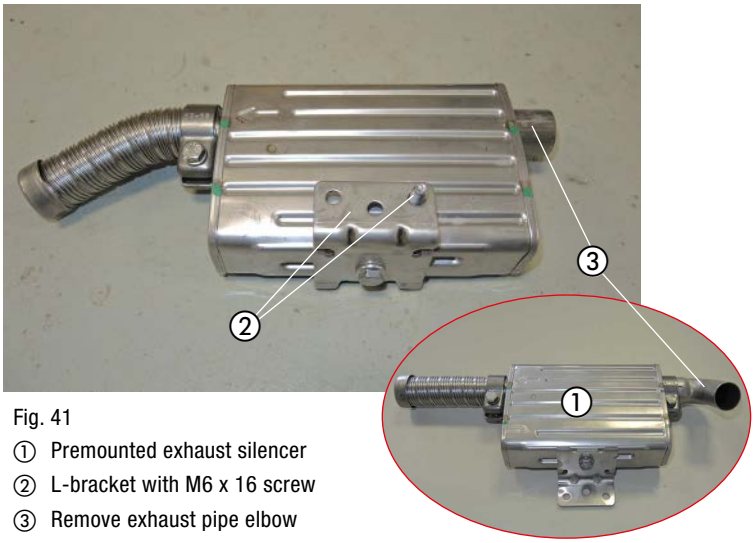

Fig. 41
① Premounted exhaust silencer
② L-bracket with M6 x 16 screw
③ Remove exhaust pipe elbow

4 INSTALLATION

Mount the exhaust silencer to the bracket (9502) using the M6 x 16 screw and an M6 nut as shown.

Shape the exhaust pipe end as shown.

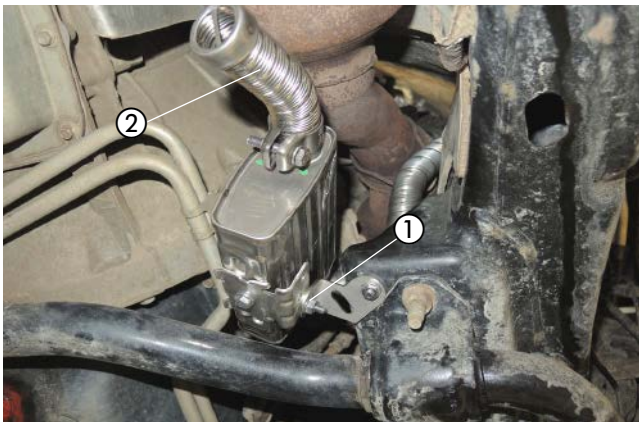

Fig. 42
① Mount the exhaust silencer
② Shape exhaust pipe end

Fasten the exhaust pipe to the exhaust intake connection of the exhaust silencer with a clamp and take it to the heater.



Fig. 43
① Connect exhaust pipe to exhaust silencer

Take the exhaust pipe through the grommet and connect with a clamp to the ready mounted exhaust pipe elbow of the heater.

⚠ CAUTION!
When laying the exhaust pipes, ensure they are at a sufficient distance from adjacent body components.



Fig. 44
① Connect exhaust pipe to exhaust pipe elbow of heater

4 INSTALLATION

MAKE TANK CONNECTION
(see photos 45 to 48)

Remove the fuel tank according to the manufacturer's instructions. Dismantle the tank fitting, disconnect the plug-in connection and the fuel lines from the tank fitting.

Hold the B8 body washer of the tank extractor at the marked point on the upper part of the tank fitting and mark the drilling point.

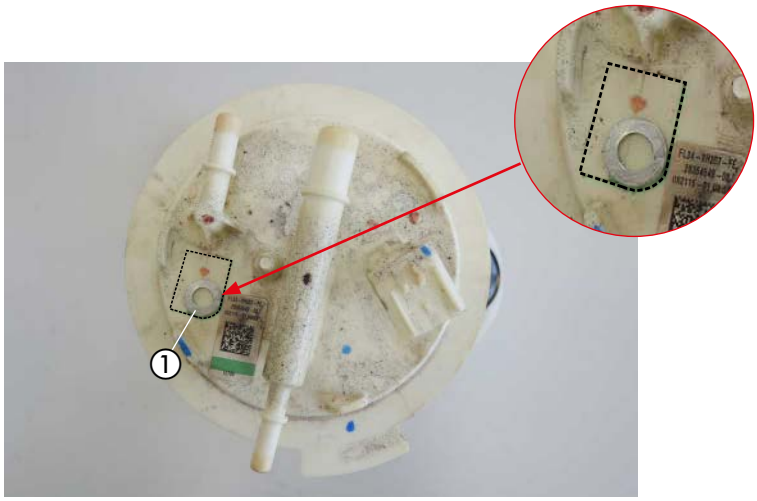

Fig. 45
① B8 body washer of the tank extractor

Drill an 8 mm Ø hole in the marked position in the upper part of the tank fitting.

⚠ CAUTION!

Make sure no impurities enter the tank when drilling the tank fitting.

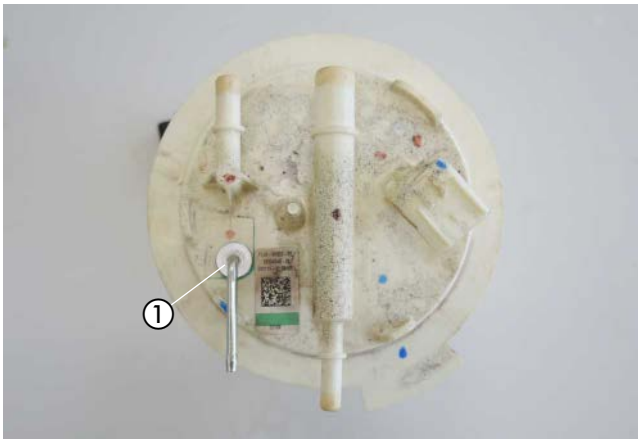

Fig. 46
① Drill an 8 mm Ø hole in the top part of the tank fitting

Introduce the prepared tank extractor through the hole, align as shown and screw firmly with the M8 nut from below.

⚠ CAUTION!

The tank fitting should not be removed for longer than 10 minutes because of the expansion of the fuel tank!

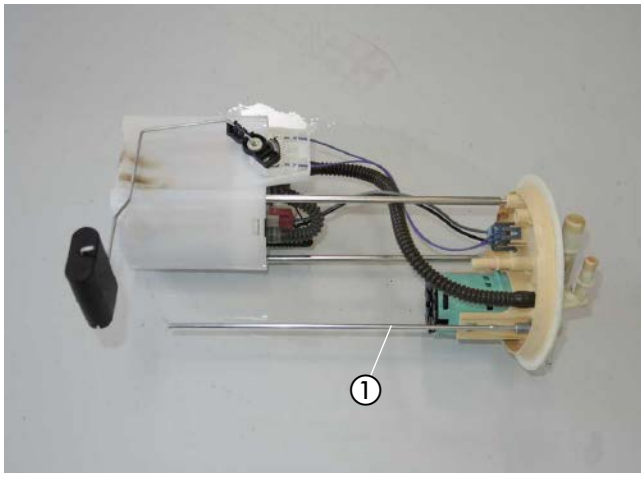

Fig. 47
① Mount tank extractor

4 INSTALLATION

Insert the tank fitting back into the tank and fasten with the locking ring; ensure the seal fits properly.

Connect the fuel pipe (intake line) with the 105° fuel hose at the intake connection of the fuel extractor.

Take the fuel pipe (intake line) in front of the tank and slot in the holders.
Re-install the fuel tank.

PLEASE NOTE!
Secure all connection points with clamps.



Fig. 48
① Connect fuel pipe (intake line)

LAYING THE FUEL PIPE
(see photos 49 to 51)

Connect the fuel pipe (pressure line) to the fuel connection of the heater using the 4.5/3.5 mm Ø adapter.

Plug in the connector of the main cable harness and the power supply cable loom to the heater.

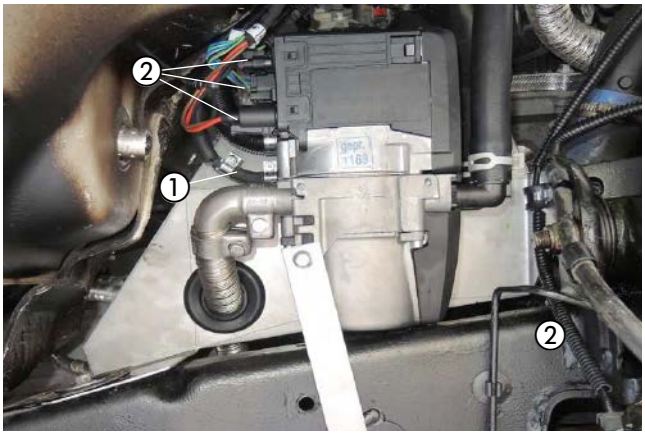

Fig. 49
① Mount fuel pipe (pressure line) with 4.5/3.5 mm Ø adapter
② Plug in electrical connections at heater

Take the fuel pipe (pressure line) together with the metering pump cable behind the insulation mat at the engine partition to the left side of the vehicle.



Fig. 50
① Lay fuel pipe (pressure line)

4 INSTALLATION

Take the fuel pipe (pressure line) together with the metering pump cable along the vehicle's cable loom to the installation position of the metering pump at the left vehicle underbody.



Fig. 51
① Lay fuel pipe (pressure line)

⚠ CAUTION!
When laying fuel lines, always ensure they are at an adequate distance from hot vehicle and heater parts.

INSTALL AND CONNECT THE METERING PUMP
(see photo 52)

Mount the premounted metering pump to the strap of the activated carbon canister with an M6 x 16 screw.
Ensure it is installed with at least a 15° rising gradient on the pressure side.
Route the fuel pipe (intake line) from the tank extractor to the metering pump and connect with the 3.5 x 3 mm Ø fuel hose to the intake connection of the metering pump.

Connect the fuel pipe (pressure line) from the heater with the 105° fuel hose elbow to the discharge end of the metering pump.

Connect the connector to the metering pump.

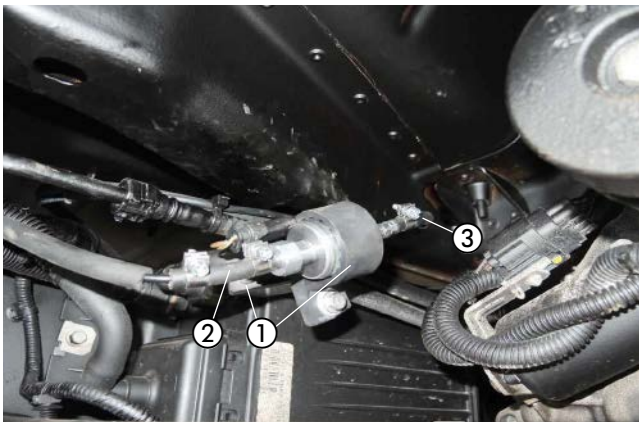

Fig. 52
① Install and connect the metering pump
② Metering pump intake end
③ Metering pump discharge end

⚠ CAUTION!
Use a sharp knife to cut the fuel pipe to length.
Secure all hose connections with hose clips.

4 INSTALLATION

INSTALL FUSE HOLDER
(see photo 53)

Using an M6 nut, mount the premounted holder with fuse block to the existing M6 stud bolt of the engine partition.

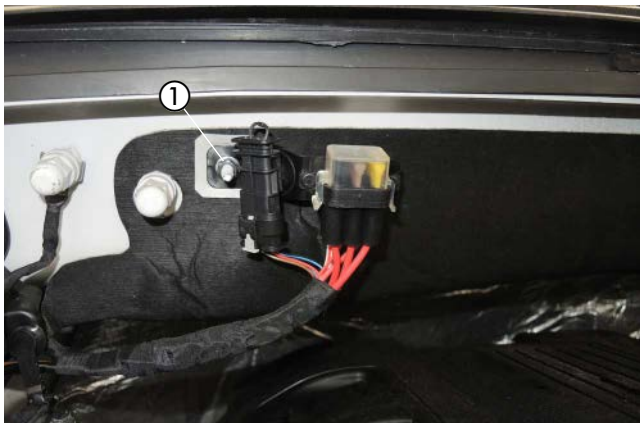

Fig. 53
① Install premounted holder with fuse block on existing M6 stud bolt of the engine partition

CABLE LAYING
(see photo 54)

Take the vehicle interior cable loom consisting of:
- 4 mm² ws/rt and 1 mm² sw/rt cable
- 3-wire control unit cable loom
- 4-pin fan control box cable loom

through the vehicle cable grommet on the passenger side of the engine partition into the interior of the vehicle.

⚠ CAUTION!
When laying the cable looms, ensure they are at an adequate distance from hot vehicle and heater parts.
Use cable ties to fix the cable looms in suitable places.



Fig. 54
① Vehicle cable grommet

POWER SUPPLY
(see photo 55)

Route the 4 mm² rt positive cable to the positive terminal of the battery and connect with cable lug A6.

Route the 2.5 mm² br earth cable to the negative terminal of the battery and connect with the A6 cable lug.

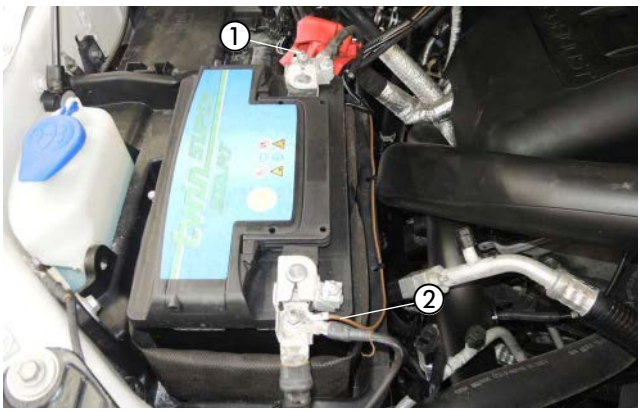

Fig. 55
① Connect positive cable 4 mm² rt
② Connect 2.5 mm² br earth cable

4 INSTALLATION

FAN CONTROL
(see photos 56 to 60)

Mount the fan control box and the stationary part of the EasyStart Remote/Remote+ with an M6 x 16 screw to the existing hole in the support of the instrument panel on the right side of the vehicle as shown.

Insulate the 4 mm² ws/rt cable of the “vehicle interior” cable loom and tie it back.

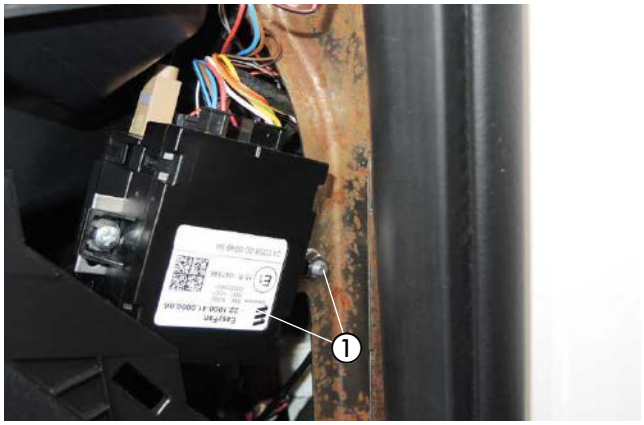

Fig. 56
① Mount fan control box and stationary part of the EasyStart Remote/Remote+

Connect the 0.5 mm² sw/rt cable from the “control unit” cable loom with the 0.5 mm² sw/rt cable from the EasyFan fan control box as shown in the circuit diagram using an 0.5 - 1.5 mm² butt-type connector.

⚠ CAUTION!
If the “EasyScan” diagnostic system is present, change the coding to “EasyFan installed”.
This enables the CAN interface to the “EasyFan” fan control box for diagnosis of the “EasyFan” fan control box. Analogue activation via black/red is thus disabled and no longer needed.
To this end, insulate and tie back the 0.5 mm² sw/rt cable from the vehicle interior cable loom and from the fan control box.

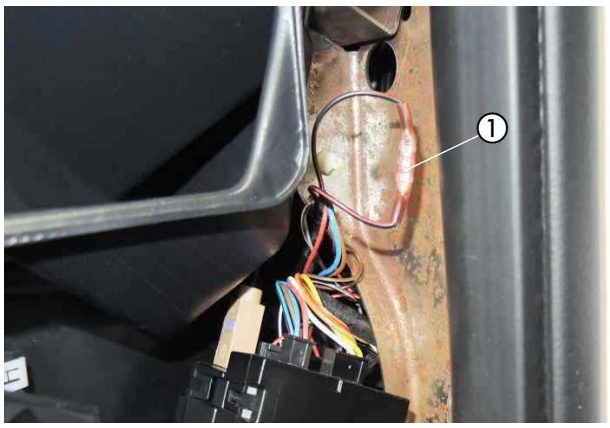

Fig. 57
① Connect 0.5 mm² sw/rt cable from the vehicle interior cable loom with 0.5 mm² sw/rt cable from the fan control box

Take the cable loom from the EasyFan fan control box to the aircon control.



Fig. 58
① Take cable loom from EasyFan fan control box to aircon control

4 INSTALLATION

Disconnect the 0.5 mm² gr/or cable (pin 17) from the 24-pin black connector of the aircon control and connect the 0.5 mm² ge and 0,5 mm² or/gn cables using two 0.5 - 1.5 mm² butt-type connectors as shown in the circuit diagram.

Disconnect the 0.5 mm² vi/or cable (pin 18) from the 24-pin black connector of the aircon control and connect the 0.5 mm² ws and 0,5 mm² or/br cables using two 0.5 - 1.5 mm² butt-type connectors as shown in the circuit diagram.

PLEASE NOTE!
The cable colours may vary!

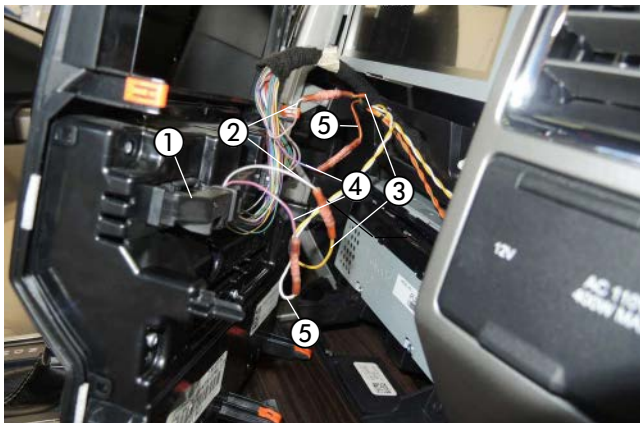

Fig. 59
① 24-pin black connector
② Disconnect 0.5 mm² cable gr/or (pin 17)
③ Insert 0.5 mm² ge and 0.5 mm² or/gn cables
④ Disconnect 0.5 mm² cable vi/or (pin 18)
⑤ Integrate 0.5 mm² ws and 0.5 mm² or/br cables

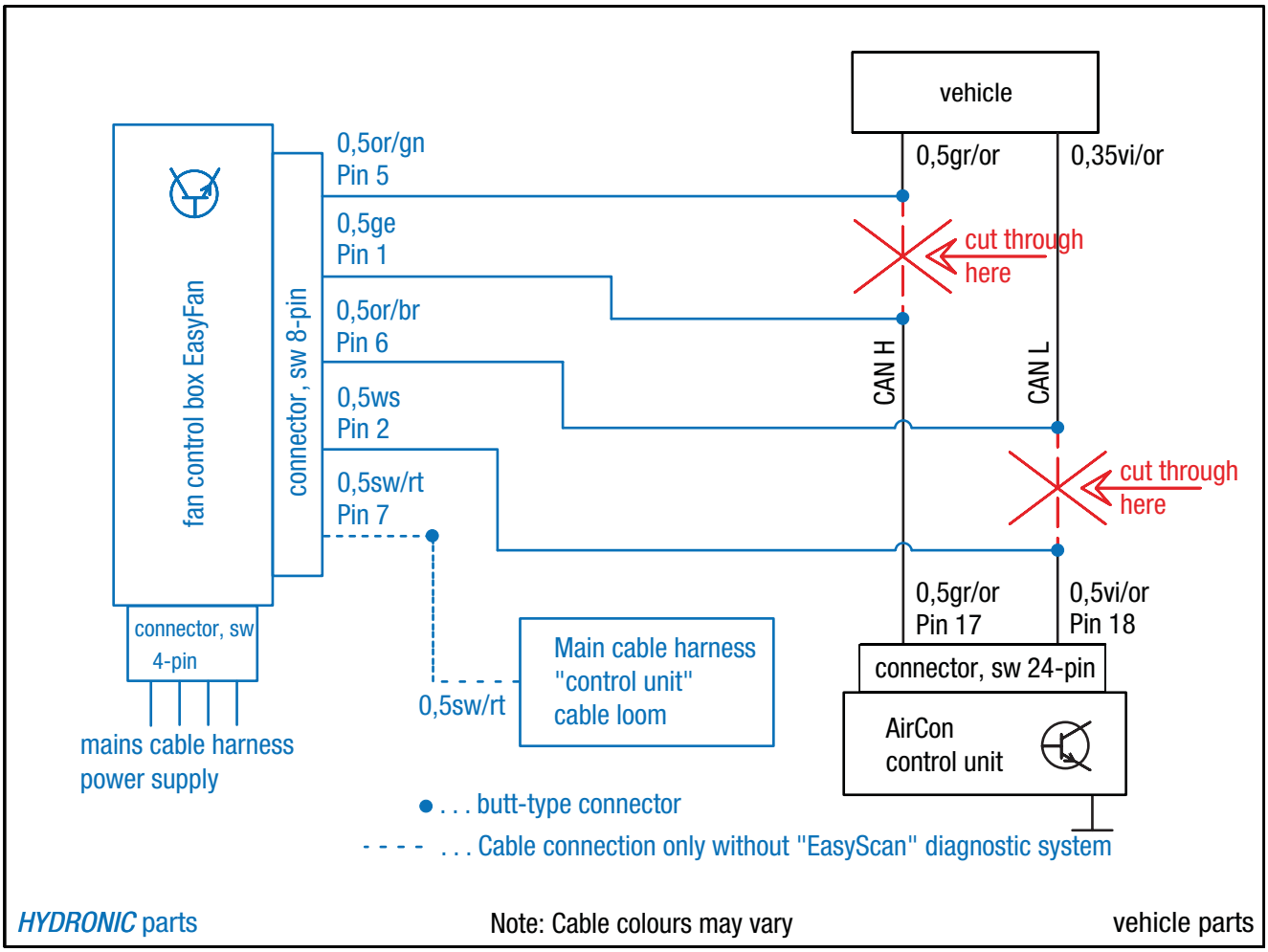

Fig. 60

4 INSTALLATION

INSTALL EASYSTART TIMER
(Alternative suggestion - consult with the customer)
(see photo 61)

The EasyStart Timer is installed according to the “EasyStart Timer” installation instructions.

Mount the EasyStart Timer to the trim moulding of the gearshift lever as shown.



Fig. 61
① Install EasyStart timer

INSTALL EASYSTART REMOTE+ RADIO REMOTE CONTROL
(Alternative suggestion - consult with the customer)
(see photos 62 to 64)

The EasyStart Remote+ is installed according to the Technical Description for the EasyStart Remote+, refer to the “Installation Instructions” section.

Mount the button of the EasyStart Remote+ in the trim moulding of the instrument panel on the left next to the hazard light switch.
To do so, drill a 10 mm Ø hole in the area and fit the button in the hole.



Fig. 62
① Mount button of the EasyStart Remote+

Fit the EasyStart Remote+ temperature sensor to the trim moulding below the glove compartment.

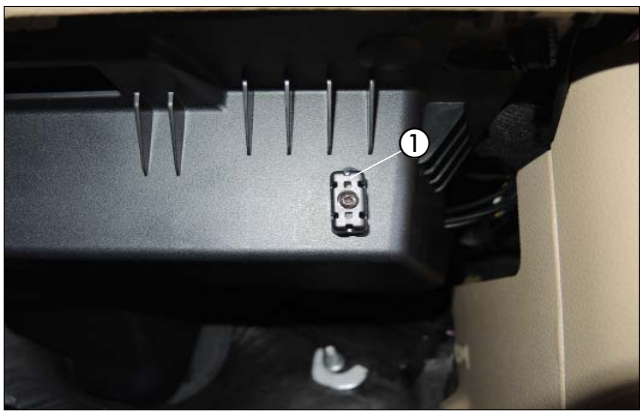

Fig. 63
① Mount the temperature sensor of the EasyStart Remote+

4 INSTALLATION

The stationary part of the EasyStart Remote+ was already fitted when mounting the fan control box.

Connect the antenna cable of the EasyStart Remote+ to the stationary part, take it to the right and lay it in the rubber door seal on the passenger's side.

Lay the cables from the installed button and temperature sensor together with the “Control unit” cable loom to the installed position of the stationary part and connect to the stationary part.

CAUTION!
Use cable ties to fix any excessive length of antenna cable underneath the instrument panel.

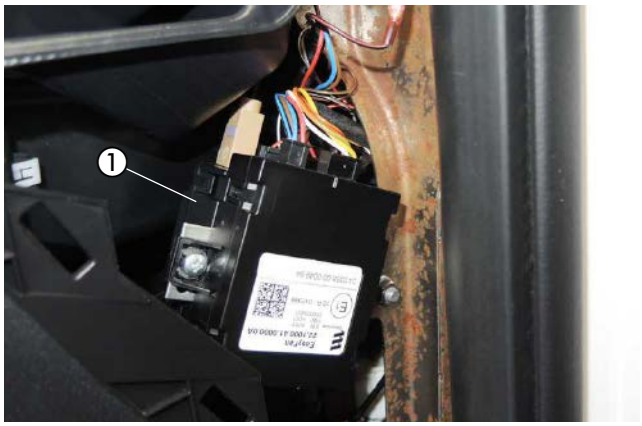

Fig. 64
① Stationary part of the EasyStart Remote+

5 FOLLOWING INSTALLATION

ADHERE THE “REFUEL” LABEL
(see photo 65)

Adhere the “Refuel” label inside the fuel tank flap as shown.



Fig. 65
① Adhere the “Refuel” label

COMPLETE THE VEHICLE

- Install all removed parts in the reverse order.
- Reconnect the battery.
- Check that the hoses, hose clips and pipe clamps as well as all electrical connections are fitted securely.
- Use cable ties to secure all loose cables, lines, etc.
- Restore all the vehicle's programmed settings (radio, window lift, etc.).
- Fill the cooling system, start the engine, vent the cooling system and check for leaks, top up any missing coolant liquid up to the marking (arrow).
- Adhere the duplicate nameplate in a clearly visible position near the heater or at a suitable point on the B-pillar.
- Adhere the “Refuel” label in the fuel tank flap or at a suitable point on the B-pillar.
- Please also note and follow the vehicle manufacturer's information on filling and venting the cooling system.
- Read and observe all official regulations and safety instructions in the Technical Description.
- Program the control unit and place the operating instructions in the glove compartment.
- Place the leaflet for the customer in the glove compartment or hand over personally to the customer.

⚠ CAUTION!
Fill the cooling system only with the coolant liquid specified by the vehicle manufacturer.

STARTING UP THE HEATER

- Switch on the heater at the control.
  See Operating Instructions - Control.

6 PARTS OVERVIEW



Fig. 66

INITIAL COMMISSIONING (EASYSTART TIMER)

INITIAL COMMISSIONING

For initial commissioning, the following steps must be carried out one after the other.

APPLYING THE OPERATING VOLTAGE

The operating voltage is applied by inserting the fuse A5 into the fuse holder.
After applying the operating voltage INIT appears in the display.

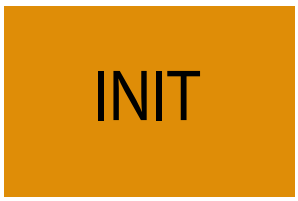

Note: The timer checks which type of heater is connected and configures the Menu bar (automatic detection).

SET THE TIME

Use the ◄ or ► button to set the hours.

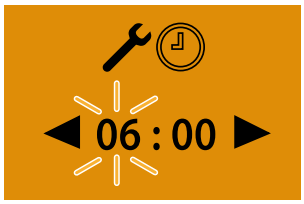

Press the ▭ button to confirm the setting.

Use the ◄ or ► button to set the minutes.

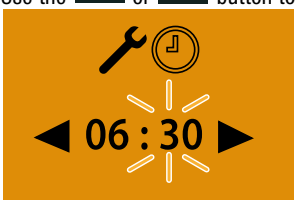

Press the ▭ button to confirm the setting.

SET WEEKDAY

Use the ◄ or ► button to set the weekday.

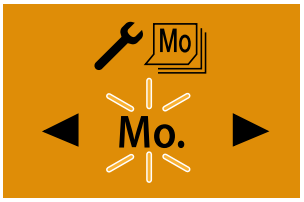

Press the ▭ button to confirm the setting.
Then configure the EasyStart Timer.

INITIAL COMMISSIONING (EASYSTART TIMER)

CHAMBER ASSIGNMENT OF CONNECTOR HOUSING (ITEM 4) AND BUSH HOUSING (ITEM 5)

(Assignment seen from the cable inlet side)

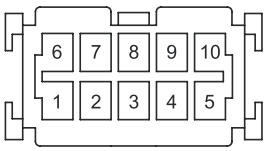

-XS10 (Pos. 4)

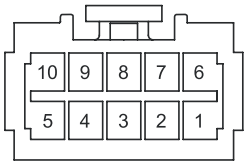

-XB10 (Pos. 5)

-XS10 / -XB10 CONNECTOR PIN ASSIGNMENT TABLE

Pin	Signal	Cable colour	Cross section
1	Terminal 30	red	0.35 mm^2
2	Terminal 58	grey / black	0.22 mm^2
3	Terminal 31	brown	0.35 mm^2
4	Diagnostics	blue / white	0.22 mm^2
5	DAT cable	violet	0.22 mm^2
6	S^+	yellow	0.35 mm^2
7	ADR	brown / yellow	0.22 mm^2
8	ADR	white / red	0.22 mm^2
9	Temp (-)	brown / white	0.22 mm^2
10	Temp (+)	grey	0.22 mm^2

INITIAL COMMISSIONING (EASYSTART REMOTE+)

CARRY OUT INITIAL COMMISSIONING

For initial commissioning, the following steps must be carried out one after the other.

INSERT THE BATTERY INTO THE MOBILE UNIT

Insert the supplied battery in the mobile unit, as described in the EasyStart Remote+ operating instructions, in the “Maintenance / Replacing the Battery” chapter. Do not activate the mobile unit yet.

APPLYING THE OPERATING VOLTAGE

The operating voltage is applied by inserting the fuse into the fuse holder.

AUTOMATIC DETECTION

Five seconds after applying the operating voltage the button's LED starts to light up. The radio remote control now checks which heater is connected and configures the user prompting of the mobile unit.

TEACHING THE MOBILE UNIT

If the button's LED starts to flash, the mobile unit can be taught.

NOTE ON THE ADD TEACHING MODE

The **Add** function can be used to teach up to 4 mobile units to one stationary part; but only one mobile unit can make contact with the stationary part

Notes on the AddE teaching mode

The **AddE** is only used to teach the current mobile unit. All previously taught mobile units are deleted.

PLEASE NOTE!

If the mobile unit is not taught within 30 seconds, the button's LED indicator goes out.
Press the button until the LED starts to flash. Then teach the mobile unit.

TEACH MOBILE UNIT - ADD TEACH MODE

Press the  or  button, Add is displayed.



Confirm Add teach mode by pressing the  button.

Teach mobile unit - AddE teach mode
Use the  or  button to select **AddE**.



Confirm AddE teach mode with the  button.

INITIAL COMMISSIONING (EASYSTART REMOTE+)

AFTER CONFIRMING ADD OR ADDE

SET THE TIME

Use the ◄ or ► button to set the hours

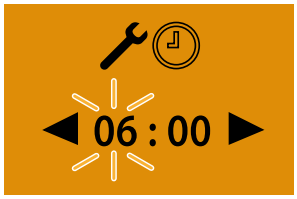

Press the ▭ button to confirm the setting

Use the ◄ or ► button to set the minutes

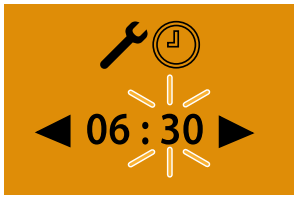

- Press the ▭ button to confirm the setting
- Set weekday Use the ◄ or ► button to set the weekdays

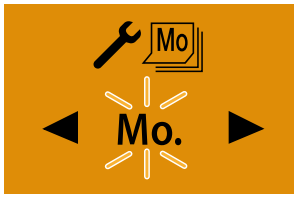

Press the ▭ button to confirm the setting. Then configure the EasyStart Remote+.

Teach an additional mobile unit

Press the button installed in the vehicle until the button's LED starts to flash.

Press the ▭ or ▭ button on the mobile unit, Add is displayed.

Confirm teach mode with the ▭ button.



The additional mobile unit is taught.

CONFIGURE EASYSTART REMOTE+

The system must be configured according to its use.

PIN CONFIGURATION (EASYSTART REMOTE+)

CONNECTING THE CONNECTOR HOUSING TO THE STATIONARY PART

Attach the tab connector to the control unit lead harness.
Clip the control unit lead harness and the button lead harness into 12-pin connector housing.
(Connector housing pin assignment)
Push the contact locking device into the connector housing.
Connect the 12-pin connector housing to the stationary part.

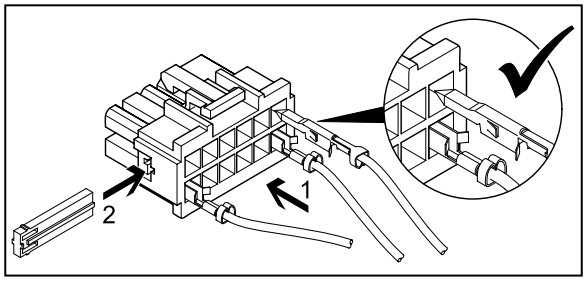

PLEASE NOTE!

- When installing the connector, ensure that the locking tongues always face the middle of the connector. Only in this position do the tongues latch into the housing (see sketch).

PIN ASSIGNMENT AT THE STATIONARY PART

PIN	SIGNAL	CABLE COLOUR
1	Terminal 30 (plus)	red
2	-	
3	Terminal 31 (plus)	brown
4	JE diagnostics / DAT cable	blue / white / vi
5	-	
6	Button LED (+)	red / yellow
7	Button (+)	brown / yellow
8	Button (-)	brown
9	-	
10	-	
11	-	
12	-	

Connector housing chamber assignment -XB12 (assignment seen from the cable inlet side)

DIAGNOSTICS

EASYSTART TIMER / REMOTE+ WORKSHOP MENU

The service functions listed in the following can be displayed, read out and / or changed via the vehicle workshop menu.

NOTE!

- A reset (remove 5A fuse) is necessary to activate some functions. To do this, not and follow the relevant note under “Comments” of the “Service functions overview”.
- To correct the fault, refer to the heater's repair instructions.

OPENING THE VEHICLE WORKSHOP MENU

Display ON, the Start display appears.

Use the ◄ or ► button to select the symbol in the Menu bar.

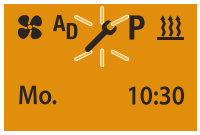

Confirm the SETTINGS menu item by pressing the button.

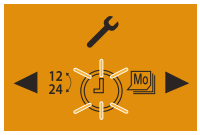

Press the LONGPRESS button for longer than 5 sec.; the Workshop menu is displayed.

Press the ◄ or ► button to select the required function, e.g. »2: Select temperature unit, °C or °F« and confirm by pressing the button.

Use the ◄ or ► button to select the temperature units °C or °F.

Press the button to confirm the selection.

Press the button to exit the workshop menu.

SERVICE FUNCTIONS OVERVIEW

Menu item	Service function	Comments
1.1.1:	Heater 1 – display current fault	The heater must be switched on to detect current faults. “no diag” is displayed if no diagnostics cable is connected.
1.1.2:	Heater 2 – display current fault	The heater must be switched on to detect current faults. “no diag” is displayed if no diagnostics cable is connected.
1.2.1:	Heater 1 – read out fault memory F1 – F5	Display fault memory F1 – F5 with error code, e.g.: F1: 12. “no diag” is displayed if no diagnostics cable is connected.
1.2.2:	Heater 2 – read out fault memory F1 – F5	Display fault memory F1 – F5 with error code, e.g.: F1: 12. “no diag” is displayed if no diagnostics cable is connected.
1.3.1:	Heater 1 – delete fault memory F1 – F5	Select the delete → function by pressing the button, the DEL display appears, flashing, press the button to confirm. “no diag” is displayed if no diagnostics cable is connected.
1.3.2:	Heater 2 – delete fault memory F1 – F5	Select the delete → function by pressing the button, the DEL display appears, flashing, press the button to confirm. “no diag” is displayed if no diagnostics cable is connected.
1.4.1:	Heater 1 – read out operating hours counter	Operating time is displayed in minutes. “no diag” is displayed if no diagnostics cable is connected.
1.4.2:	Heater 2 – read out operating hours counter	Operating time is displayed in minutes. “no diag” is displayed if no diagnostics cable is connected.

LEAFLET FOR THE CUSTOMER

INSTRUCTIONS FOR THE CUSTOMER
(see photo 1)

- No adjustments are necessary to the aircon control.

When the vehicle is unlocked (during pre-heater mode), the fan control is already disabled by the pre-heater.
The original functionalities are available when the ignition is switched on.
After locking the vehicle, it takes a few minutes for the pre-heater to activate the fan control box.



Fig. 1
① AirCon control unit

RECOMMENDATION!

- Switch the pre-heater on at least once a month for about 10 minutes, also in the summer months!
  This will ensure that it works properly during the season!
- We recommend adjusting the heating time to the driving time: Driving time > heating time.

PLEASE NOTE!

In vehicles with interior monitoring, this must be disabled for the heating process.
Please refer to the vehicle operating instructions for disabling instructions.

DE

ANSCHLUSSKONSTELLATIONEN FÜR HYDRONIC S3 12V CS

DE

Bitte beachten: Nur gültig für folgende Hydronic S3 Ausführungsvarianten **mit CAN-Schnittstelle und S+ Schaltausgang:**

Heizgeräte für Otto-Kraftstoff (Benzin)	**Bestell-Nr.**
B 4 E – 12 V CS	20.2007.05.0000
B 5 E – 12 V CS	20.2008.05.0000
Heizgeräte für Dieselkraftstoff	**Bestell-Nr.**
D 4 E – 12 V CS	25.2933.05.0000
D 5 E – 12 V CS	25.2934.05.0000

1 Anschluss Hydronic S3 12V CS an EasyStart Pro / EasyStart Web in Verbindung mit EasyFan

Anschluss über Y-Kabel (Mat.-Nr. 22.1000.35.2800) und Leiter BKRD an Bedienelement und EasyFan.

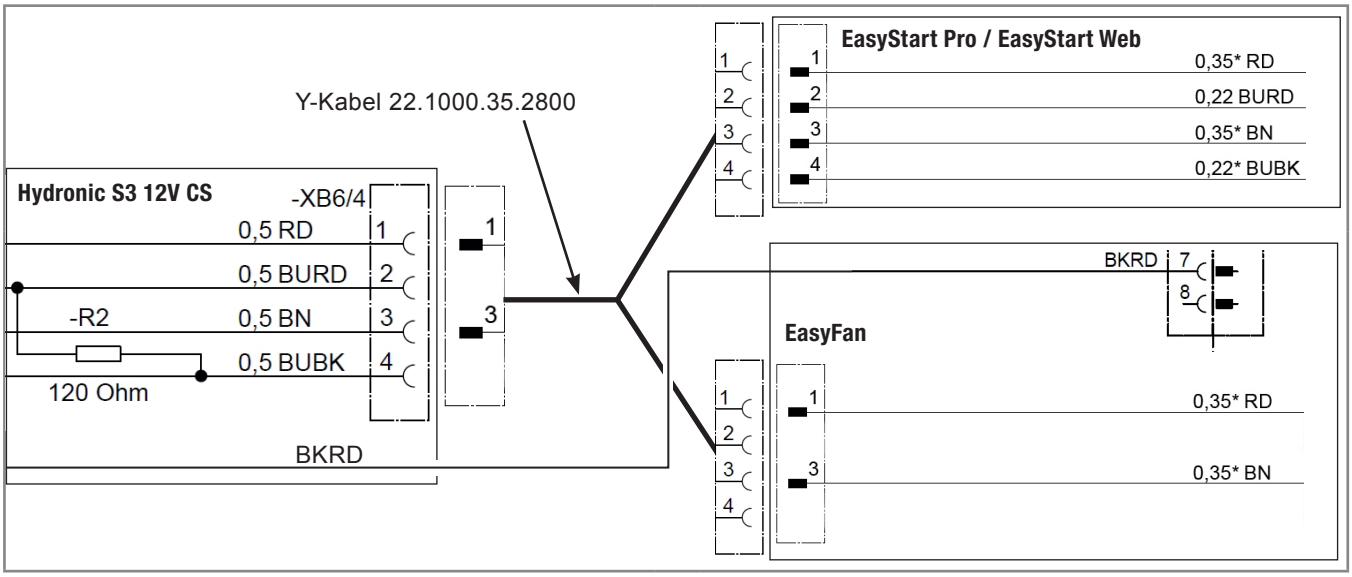

2 Anschluss Hydronic S3 12V CS an 2 x EasyStart Pro / EasyStart Web

Anschluss über Y-Kabel (Mat.-Nr. 22.1000.35.2700) an EasyStart Pro und EasyStart Web.

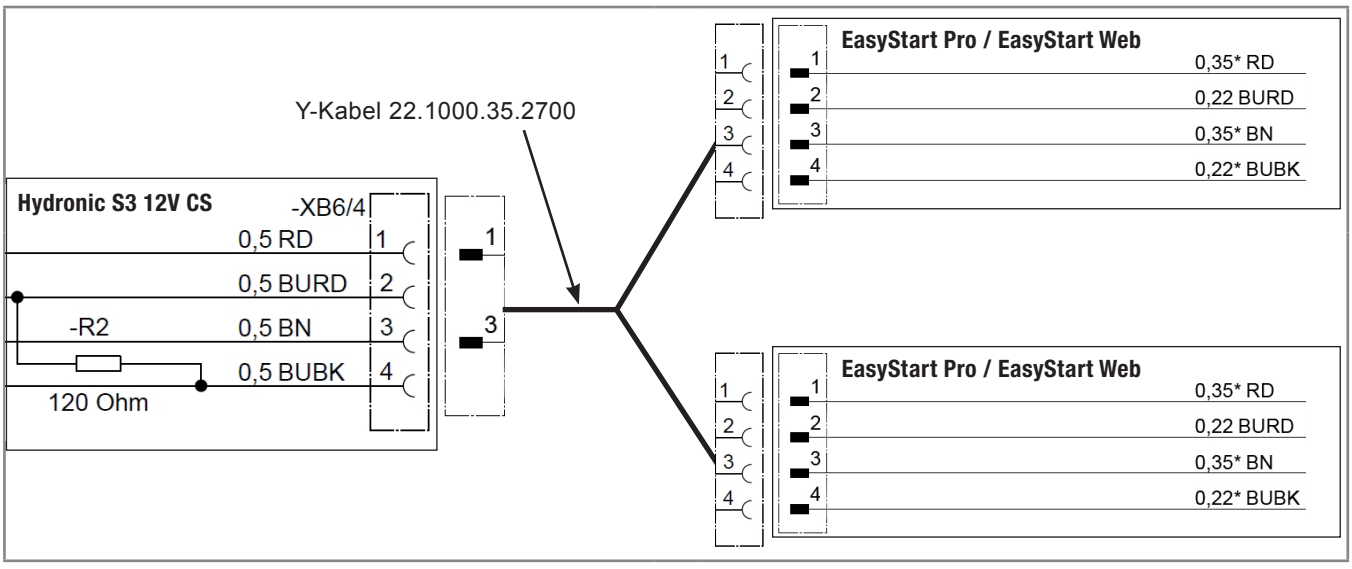

DE

3 Anschluss Hydronic S3 12V CS an EasyStart Remote

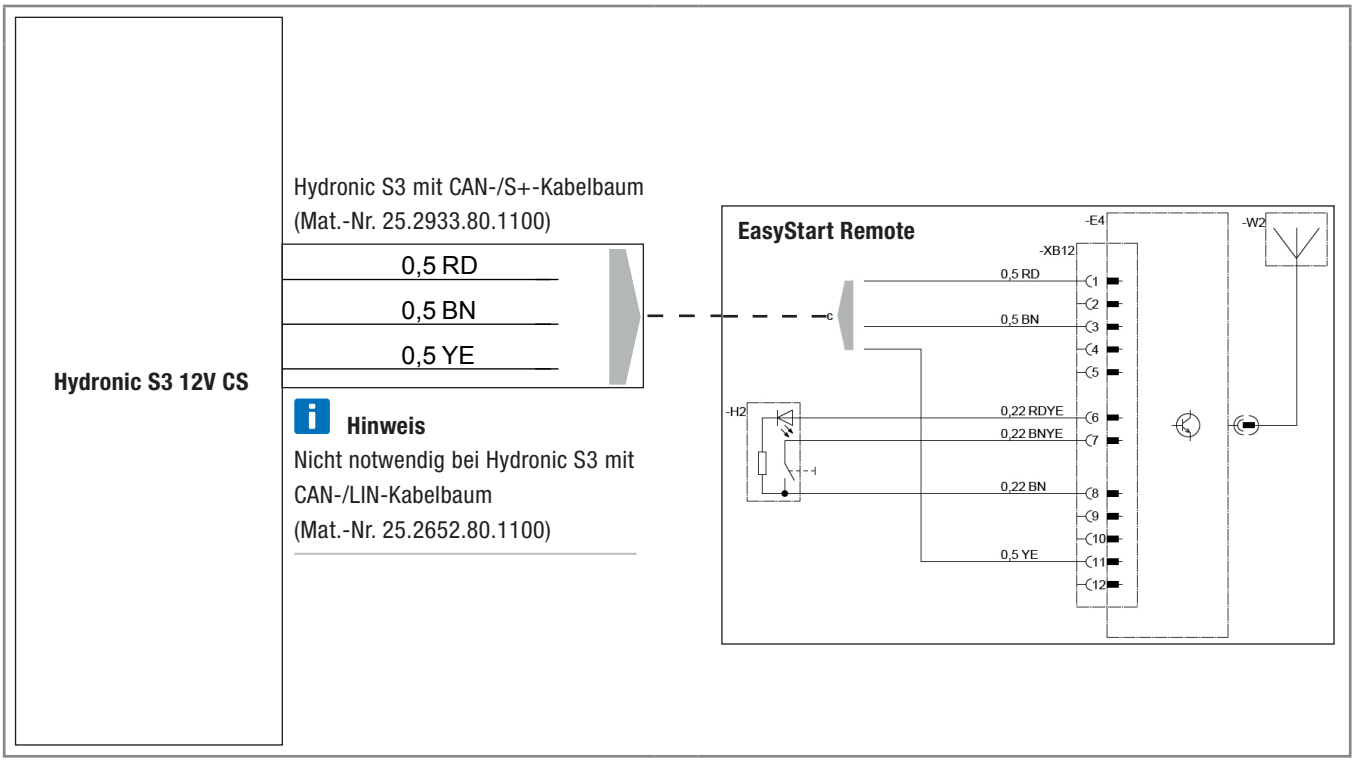

DE

4 Anschluss Hydronic S3 12V CS an EasyStart Remote+

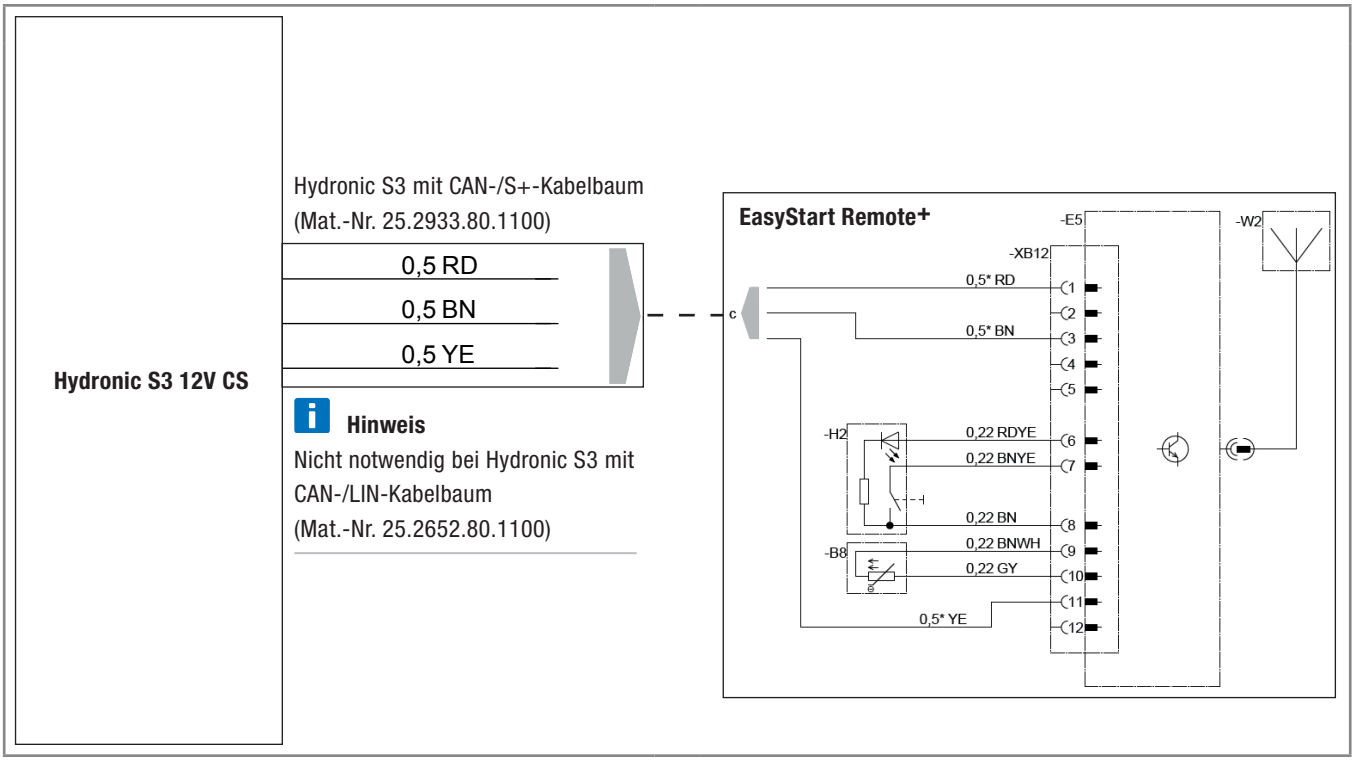

EN

CONNECTION CONSTELLATIONS FOR HYDRONIC S3 12V CS

EN

Please note: Only valid for the following Hydronic S3 versions **with CAN interface and S+ switching output:**

Heaters for petrol	**Order No.**
B 4 E – 12 V CS	20.2007.05.0000
B 5 E – 12 V CS	20.2008.05.0000
Heaters for Diesel	**Order No.**
D 4 E – 12 V CS	25.2933.05.0000
D 5 E – 12 V CS	25.2934.05.0000

1 Connection of Hydronic S3 12V CS to EasyStart Pro / EasyStart Web including EasyFan

Connect via Y cable (Mat.-No. 22.1000.35.2800) and line BKRD to operating element and EasyFan.

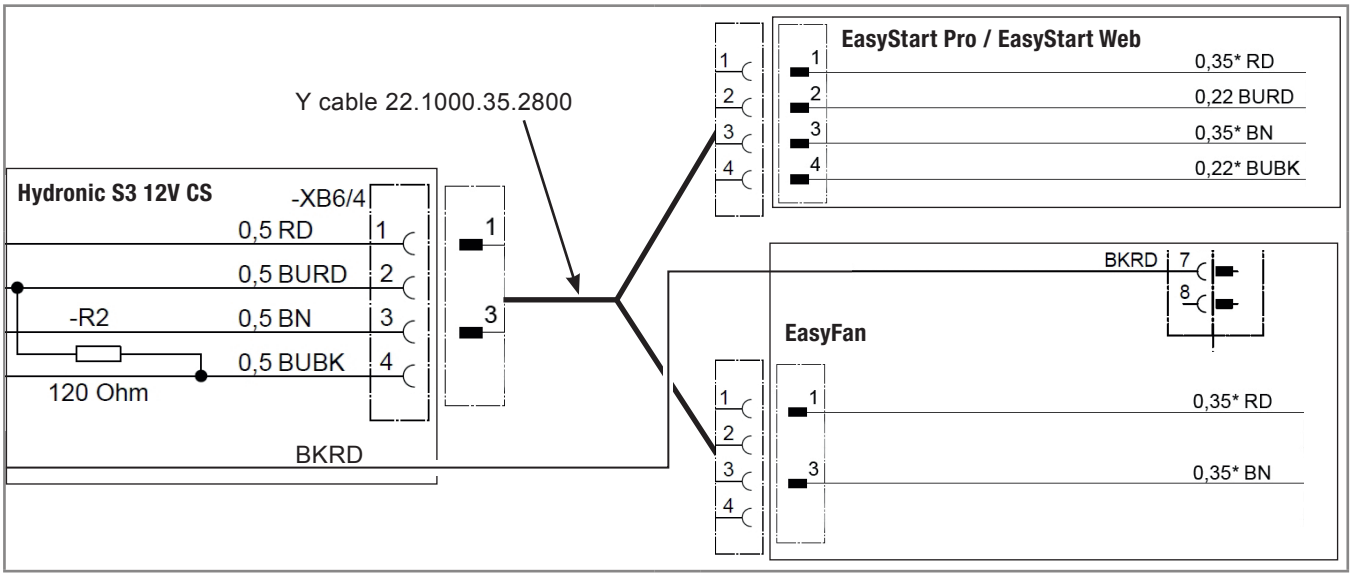

2 Connection of Hydronic S3 12V CS to 2 x EasyStart Pro / EasyStart Web

Connect via Y cable (Mat.-No. 22.1000.35.2700) to EasyStart Pro and EasyStart Web.

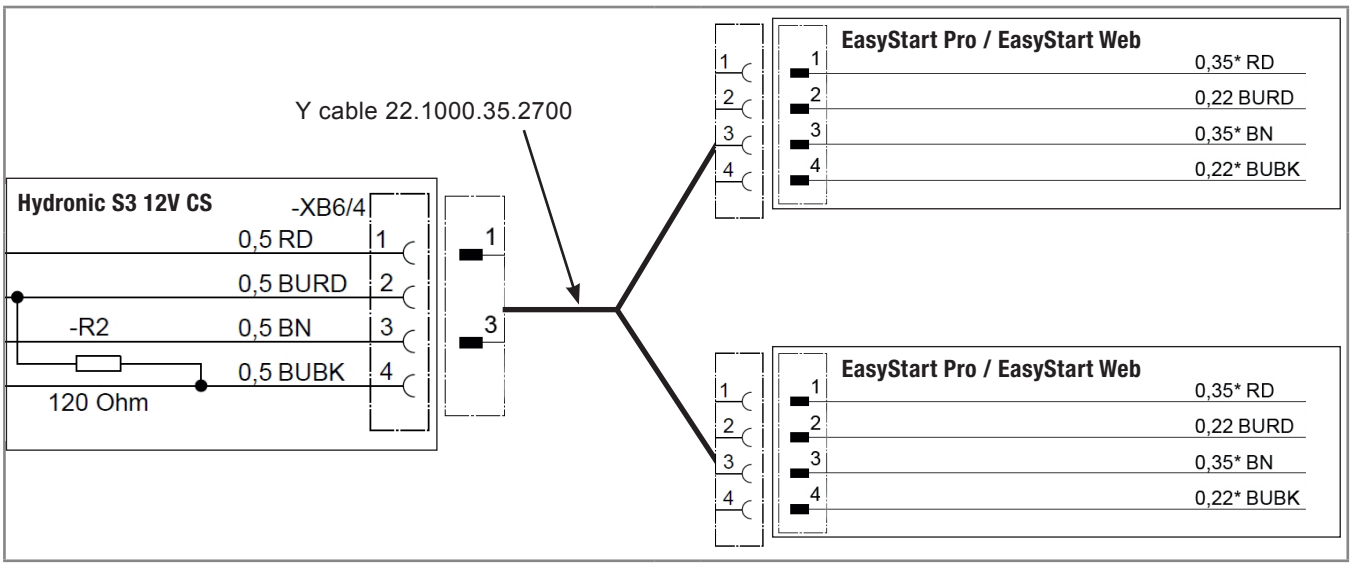

EN

3 Connection of Hydronic S3 12V CS to EasyStart Remote

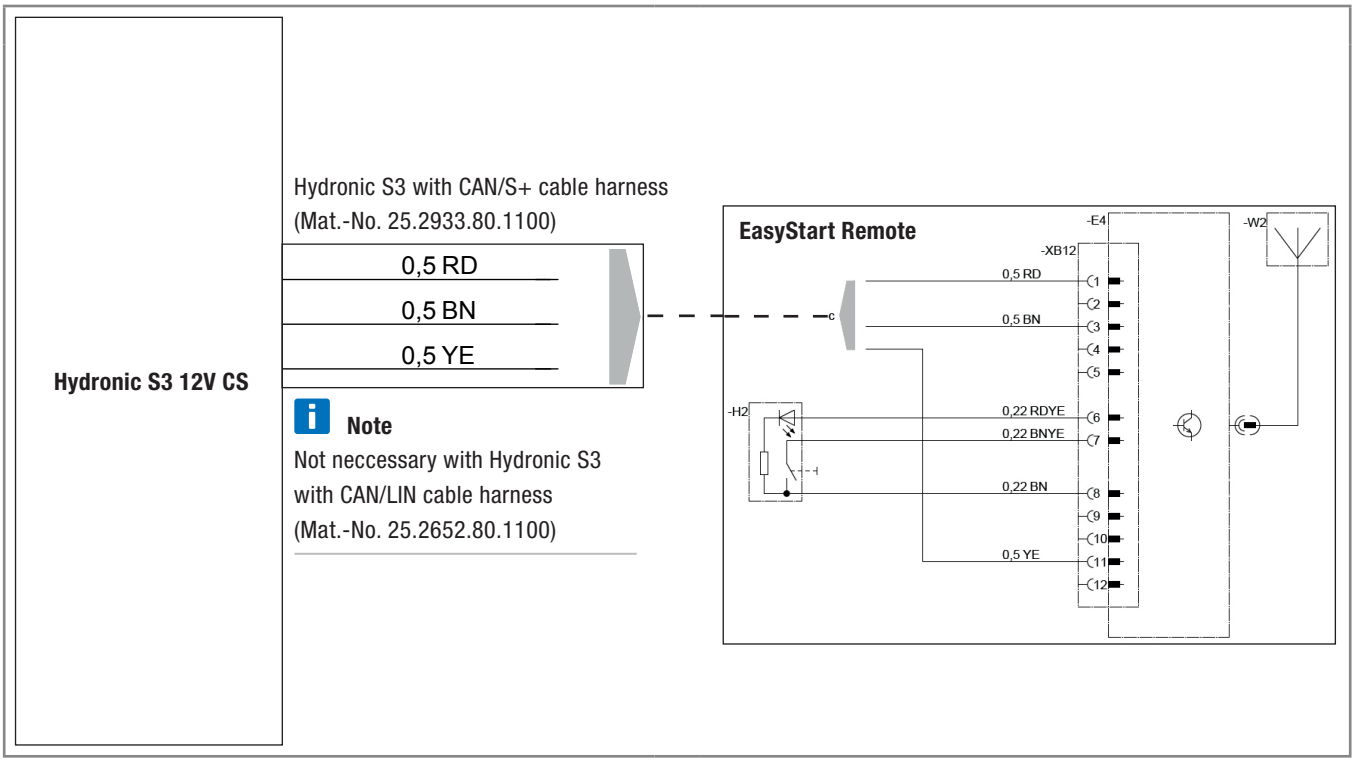

4 Connection of Hydronic S3 12V CS to EasyStart Remote+

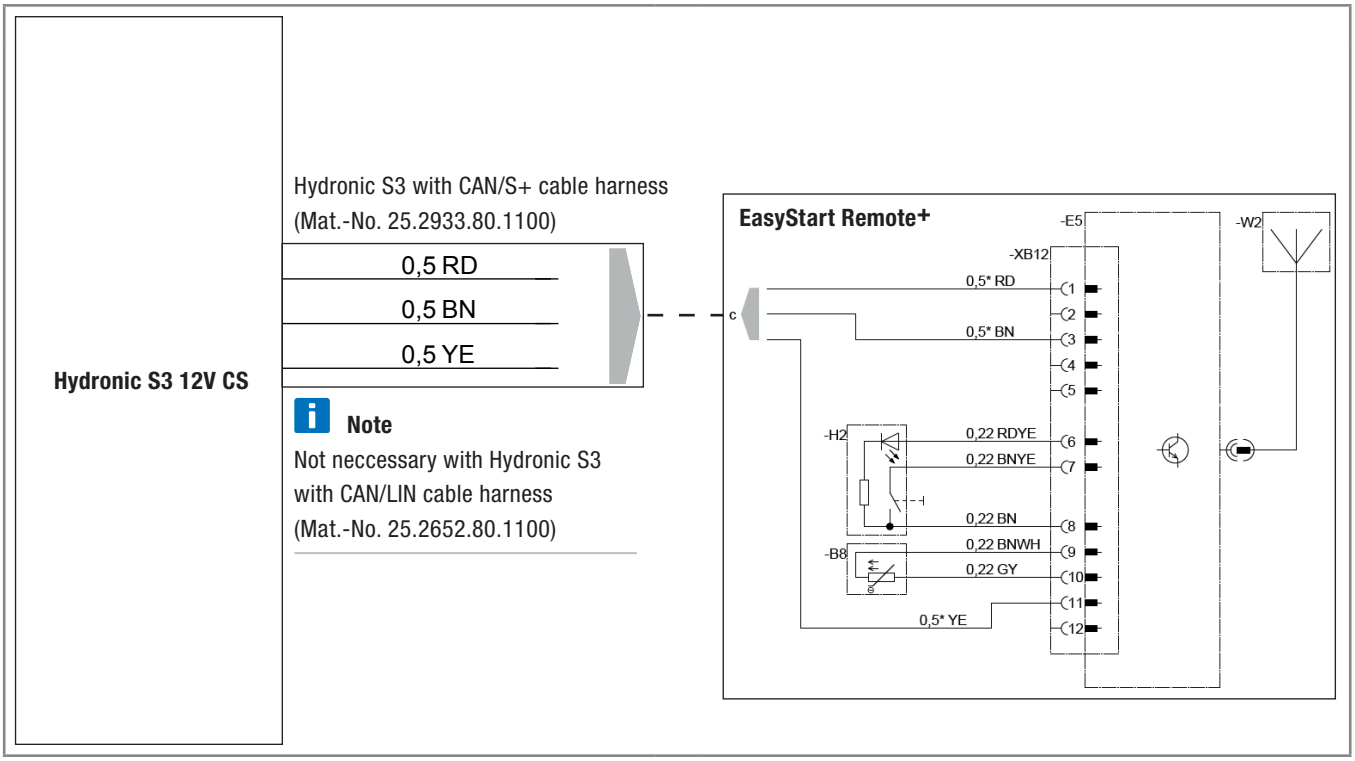

Headquarters:
Eberspächer Climate Control Systems GmbH & Co. KG
Eberspächerstraße 24
73730 Esslingen
Hotline: 03976 2350 235
Fax hotline: 01805 262624
info@eberspaecher.com
www.eberspaecher.com

Eberspächer

20 1952 95 3079 02.2018 EN 02.2018
We reserve the right to make changes © Eberspächer Climate Control Systems GmbH & Co. KG