INSTALLATION RECOMMENDATION
HYDRONIC S3 – D 5 E IN THE FORD F 250/ F 350



THIS INSTALLATION RECOMMENDATION APPLIES TO VEHICLES FROM MODEL YEAR 2016 WITH THE FOLLOWING MOTORISATION:

6.7 l cubic capacity / 8 cylinder V-engine / 328 kW - 446 HP (HSN: 1028)

WICHTIG für den elektrischen Anschluss der Hydronic S3 CS Heizgeräte: Bitte beachten Sie die Hinweise am Ende dieses Einbauvorschlages!

IMPORTANT NOTE for the electrical wiring of Hydronic S3 CS heaters: Please read the reference at the end of this installation recommendation!

Eberspächer

A WORLD OF COMFORT

CONTENTS

CHAPTER	CHAPTER DESCRIPTION	PAGE
1	Introduction	3-5
2	Preparation of the vehicle	6
3	Preliminary assembly	7-12
4	Installation	13-30
5	After installation	31
6	Parts overview	32
7	Initial commissioning EasyStart Timer, Remote+	33-37
8	Diagnostics	38
	Leaflet for the Customer	39

This installation recommendation documents the installation of the Hydronic S3 heater in a vehicle from model year 2016 with the following equipment:

- **with 2-zone automatic AirCon**
- **with fog lamps**
- **with daytime running lights**
- **with LED headlights**
- **with automatic gearbox**
- **with four-wheel drive 4 x 4 on demand**

not tested:

- manual air-conditioning

PLEASE NOTE!

This installation recommendation is valid for the above mentioned vehicle to the exclusion of all liability claims.
Deviating model years and/or deviating equipment may result in modifications to this installation recommendation.
It is therefore mandatory to check the feasibility of installing the heater in the vehicle before starting work.
All liability claims resulting from modifications to the vehicle are excluded.

Installation time: approx. 8 hours

1 INTRODUCTION

SPECIAL TEXT FORMATS, PRESENTATIONS AND PICTURE SYMBOLS

In this installation recommendation, special text formats and picture symbols are used to emphasise different contents. Please refer to the following examples for their meanings and appropriate action.

SPECIAL TEXT FORMATS AND PRESENTATIONS

- This dot (▪) denotes a list, which is started by a heading.
  - If an indented dash (–) follows a “dot”, this list is a sub-section of the black dot.

PICTURE SYMBOLS

DANGER!

This information points out a potential serious or fatal danger. Ignoring this information can result in severe injuries.

➔ This arrow indicates the appropriate precaution to take to avert the danger.

CAUTION!

This information points out a dangerous situation for a person and / or the product. Ignoring this information can result in injuries to people and / or damage to equipment.

➔ This arrow indicates the appropriate precaution to take to avert the danger.

PLEASE NOTE!

These remarks contain recommendations for use and useful tips for the operation, installation and repair of the heater.

SAFETY INSTRUCTIONS FOR INSTALLATION AND REPAIR

DANGER!

Improper installation or repair of Eberspächer heaters can cause a fire or result toxic exhaust entering the inside of the vehicle.
This can cause serious and even fatal risks.

➔ Only authorised and trained persons may install the heater according to the specifications in the technical documents or repair it using original spare parts.

➔ Installation and repairs by unauthorised and untrained persons, repairs using non-original spare parts and without the technical documents required for installation and repair are dangerous and therefore are not permitted.

➔ Installation according to this installation recommendation may only be carried out in conjunction with the respective unit-related technical description, installation instructions, operating instructions and maintenance instructions.
This document must be carefully read through before / during installation and repair and followed throughout. Particular attention is to be paid to the official regulations, the safety instructions and the general information.

PLEASE NOTE!

- The relevant rules of sound engineering practice and any information provided by the vehicle manufacturer are to be observed during the installation and repair.
- When carrying out electric welding on the vehicle, the positive cable at the battery should be disconnected and earthed to protect the control box.

LIABILITY CLAIM / WARRANTY

Eberspächer does not accept any liability for defects and damage, which are due to installation or repair by unauthorised and untrained persons.
Compliance with the official regulations and the safety instructions is prerequisite for liability claims.
Failure to comply with the official regulations and safety instructions leads to exclusion of any liability of the heater manufacturer.

ACCIDENT PREVENTION

General accident prevention regulations / health and safety regulations and the corresponding workshop, company and operating safety instructions are to be observed.

1 INTRODUCTION

ADDITIONAL INFORMATION ON THE VALIDITY OF THE INSTALLATION RECOMMENDATION

The installation recommendation is valid for the vehicle with the engine and gearbox options listed in the following.

ENGINE AND GEARBOX OPTIONS

Cubic capacity	kW / HP	Gearbox
6.7 l	328 / 446	AT

AT = automatic transmission

PLEASE NOTE!

- The installation recommendation is not valid for right-hand drive vehicles.
- Vehicle models, engine types and feature options not listed in this installation recommendation, have not been tested.
  Installation according to this installation recommendation can still be possible.

INITIAL STARTUP OF THE HEATER OR FUNCTIONAL TEST

- After installation or carrying out a repair on the heater, the coolant circuit and the whole fuel supply system must be carefully vented. Comply with the instructions issued by the vehicle manufacturer.
- Open all heating circuits before the trial run (set the temperature controller to “hot”).
- During the heater trial run, all water and fuel connections must be checked for leaks and secure, tight fit.
- If faults occur while the heater is running, use a diagnostic unit to correct the cause of the fault.

PARTS REQUIRED FOR INSTALLATION

QUANTITY	DESIGNATION	ORDER NO.
1	Hydronic S3 - D 5 E VDP	25 2921 05 00 00
1	Vehicle-specific installation kit	24 8000 35 00 34

EasyStart control unit as chosen:

1	EasyStart Timer	22 1000 34 15 00
1	EasyStart Remote+	22 1000 34 17 00

SPECIAL TOOLS REQUIRED

- Necessary torque wrench
- Blind rivet nut insertion tool
- Anti-corrosion agent
- Crimping tool
- Pliers for spring band clamps

TIGHTENING TORQUES

If no tightening torques are specified, tighten the screw connections according to the following table:

Part name	Tightening torques
Hex screw M6	10 $^{+1}$ Nm
Hex screw M8	20 $^{+2}$ Nm
Hex screw M10	45 $^{+2}$ Nm
Self-tapping M6 x 16 Torx screw	11 $^{+1}$ Nm
Screw M4	3 $^{+0.5}$ Nm
Screw M5 x 10	5 $^{+0.5}$ Nm
Screw M5 x 18	6.5 $^{+0.5}$ Nm
Pipe clip for exhaust pipe	7 $^{+1}$ Nm
Hose clip for water hose	3 $^{+0.5}$ Nm
Hose clip for combustion air pipe	5 $^{+0.5}$ Nm
Hose clip for fuel pipe	1 $^{+0.2}$ Nm

1 INTRODUCTION

INSTALLATION DRAWING

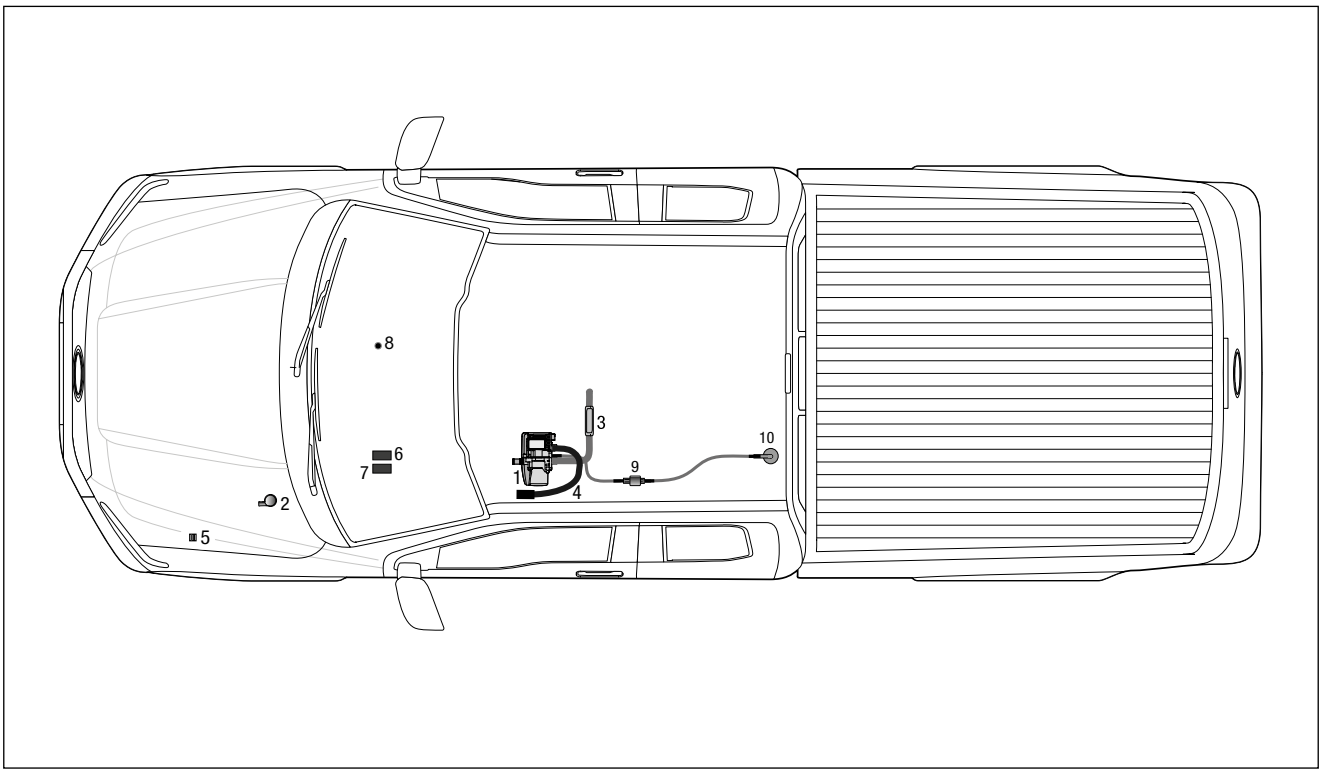

1 Heater Hydronic S3
2 Water pump
3 Exhaust pipe with exhaust silencer
4 Combustion air tube
5 Fuse holder
6 Fan control box “EasyFan”
7 Stationary part EasyStart Remote+
8 Button EasyStart Remote+
9 Metering pump
10 Fuel tank extractor

2 PREPARATION OF THE VEHICLE

PREPARATORY WORK ON THE VEHICLE

- Disconnect the battery
- Remove the aircon control
- Remove the left lower trim moulding of the instrument panel
- Remove lower gearbox cowling
- Remove front right-hand wheel
- Remove right-hand, front wheel arch liner
- Remove tank according to the manufacturer's instructions
- Depressurise the cooling system
- Drain coolant into a clean container

Instructions for removing the AIRCON CONTROL
(see photos 1 and 2)

Take the upper shelf up and out of the instrument panel.

Unscrew the two fastening screws from the cover of the radio / aircon control.



Fig. 1
① Take shelf out of the instrument panel
② 2 x fastening screws

Use a plastic wedge to release the cover of the radio/aircon control out to the back of the instrument panel.

Disconnect the electric plug from the aircon control.



Fig. 2
① Take cover of radio/aircon control out to the back of the instrument panel

3 PRELIMINARY ASSEMBLY

PREPARE HEATER
(see photos 3 and 4)

Mount the angled water connection socket to the heater as shown, see “Assembly Steps”.

Remove the duplicate nameplate from the heater.

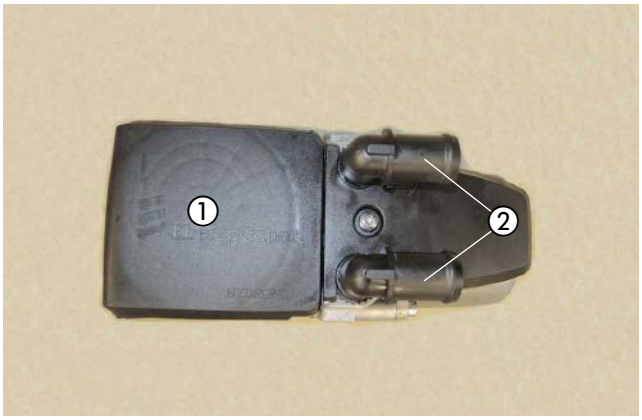

Fig. 3
① Heater
② Mount elbow connection

Installation steps

- Grease the O-ring (5) and insert in the groove at the connection socket.
- Fit the connection socket (3 or 4) in the cut-outs of the sensor cover (2). The collar of the connection socket is above the cover.
- Position the connection socket with the gearing in the sensor cover and fix accordingly.
- Fit the sensor cover on the heater with the connection socket pointing forwards.
- Press the connection socket completely into the corresponding holes on the heat exchanger.
- Adjust the direction for the angled connection socket:
  – Raise the sensor cover up to the collar of the connection socket
  – Turn the connection socket in the required direction
  – Push the sensor cover down and readjust the position of the connection socket so that the toothed edges engage again
- Fasten sensor cover with M5 x 18 (1) screw
  (tightening torque $6.5^{+0.5}$ Nm).

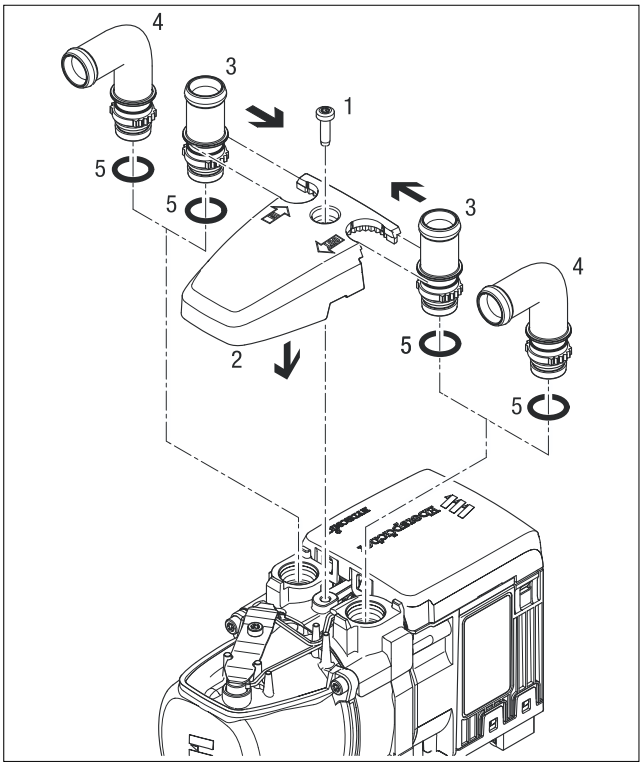

Fig. 4

1 M5 x 18 screw
2 Sensor cover
3 Connection socket, straight
4 Angled connection socket
5 O-ring

3 PRELIMINARY ASSEMBLY

ADHERE DUPLICATE NAMEPLATE
(see photo 5)

Fit the duplicate nameplate on the B-pillar on the driver's side as shown.



Fig. 5
① Fit duplicate nameplate

PREPARE UNIT BRACKET
(see photo 6)

Keep the unit bracket ready for subsequent installation.



Fig. 6
① Unit bracket

PREMOUNT WATER PUMP
(see photo 7)

Insert the water pump in the water pump holder.

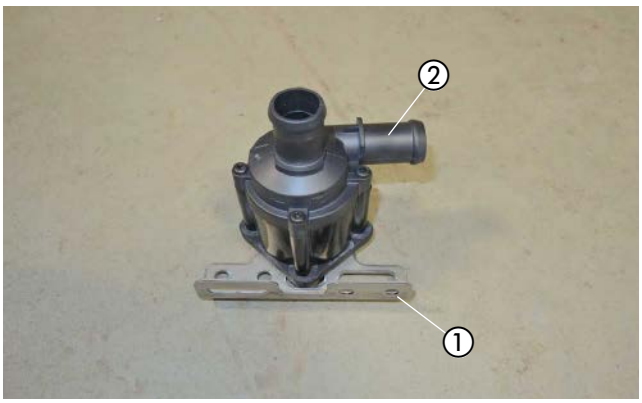

Fig. 7
① Holder, water pump
② Water pump

3 PRELIMINARY ASSEMBLY

PREPARE WATER HOSES
(see photos 8 and 9)

The water hoses are already prepared as shown.

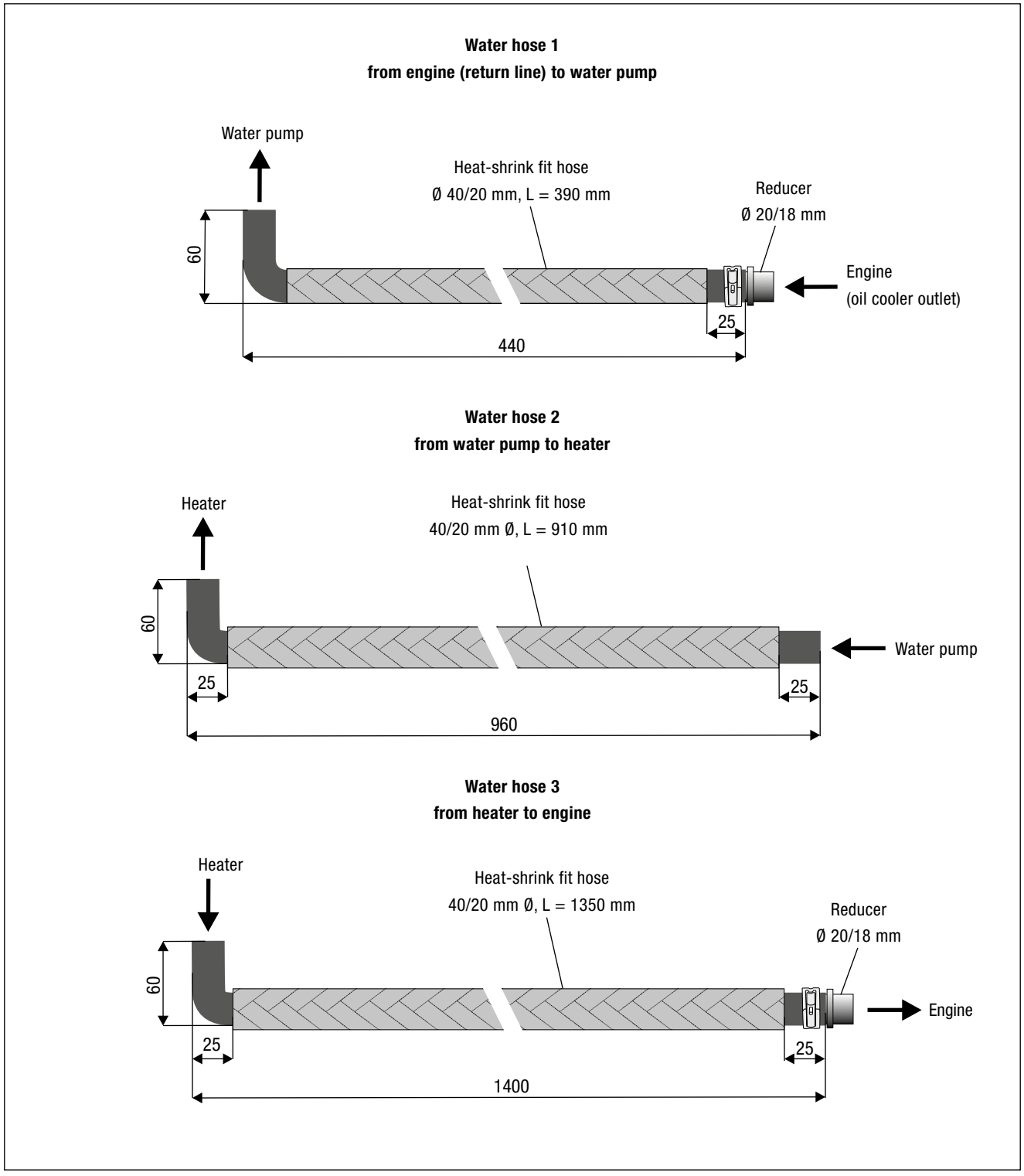

Fig. 8

3 PRELIMINARY ASSEMBLY

Water hoses 1 to 3 in the installation kit are prepared as shown in Figures 8 and 9.

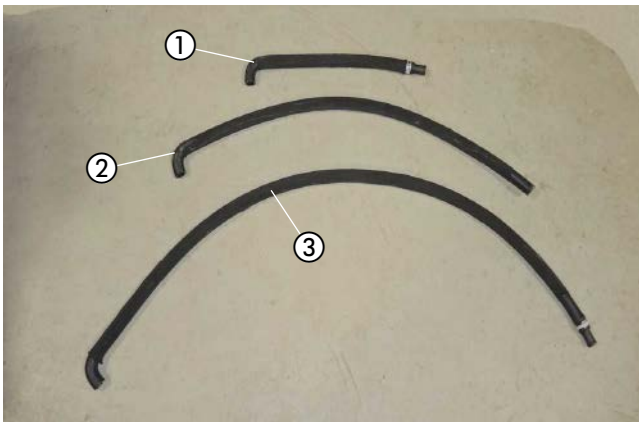

Fig. 9
① Water hose 1
② Water hose 2
③ Water hose 3

PREPARE EXHAUST SILENCER
(see photo 10)

Prepare the already premounted exhaust silencer for subsequent installation.

Shape the exhaust pipe end as shown.

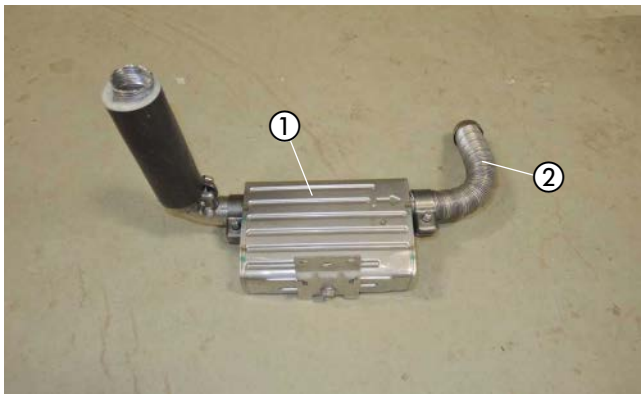

Fig. 10
① Premounted exhaust silencer
② Shape exhaust pipe end

PREMOUNT METERING PUMP
(see photo 11)

Insert the metering pump in the rubber holder as shown in the photo.

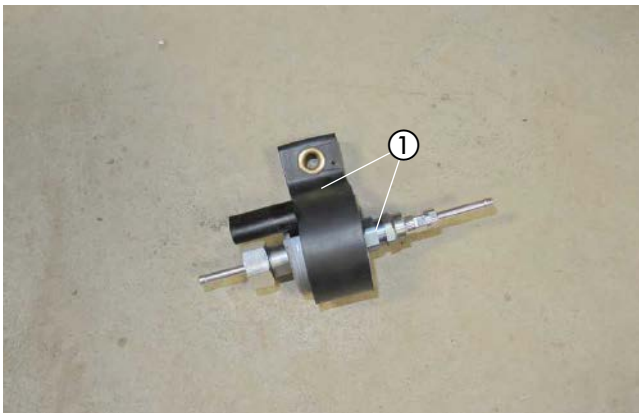

Fig. 11
① Insert metering pump in rubber holder

3 PRELIMINARY ASSEMBLY

PREPARE FUEL PIPE (SUCTION LINE)
(see photo 12)

Prepare the premounted fuel pipe (suction line) with 105° fuel hose elbow and 3.5 x 3 mm Ø fuel hose for subsequent installation.



Fig. 12
① Fuel pipe (suction line)

PREPARE FUEL PIPE (PRESSURE LINE)
(see photo 13)

Fit the 4.5/3.5 mm Ø adapter to the fuel pipe (pressure line) with a 9 mm Ø clip and keep ready for subsequent installation.

Mount the 4.5/3.5 mm Ø adapter to the fuel connection of the heater.

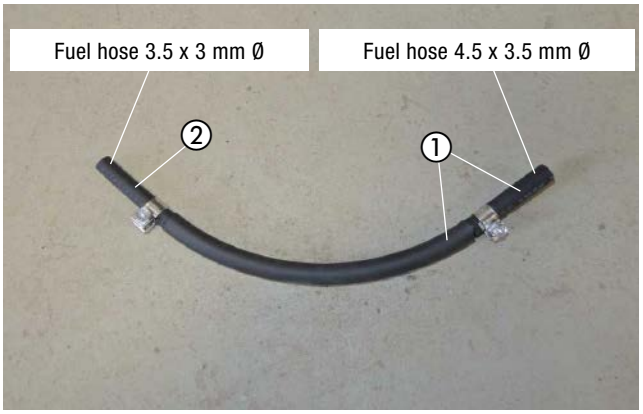

Fig. 13
① Mount fuel pipe (pressure line) with 4.5/3.5 mm Ø adapter
② Fuel hose 3.5/3 mm Ø

PREPARE FUSE BLOCK
(see photo 14)

Prepare the premounted holder with fuse block and diagnostic connector for subsequent installation.

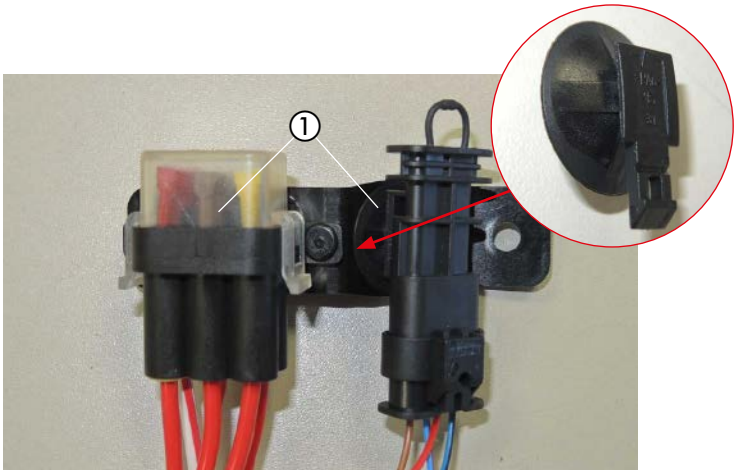

Fig. 14
① Fuse block and plug holder with diagnostic connector already premounted to holder

3 PRELIMINARY ASSEMBLY

PREMOUNT STATIONARY PART OF THE EASYSTART REMOTE+ AND EASY-FAN FAN CONTROL BOX
(see photo 15)

Mount the stationary part of the EasyStart Remote+ and the EasyFan fan control box to the 90° angle bracket (22 9000 52 00 69) using two M4 x 10 screws as shown.

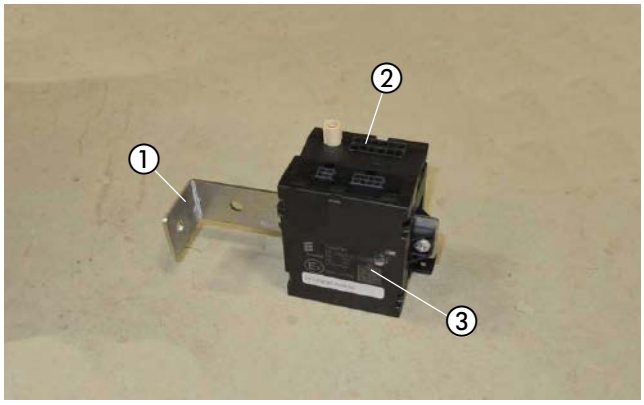

Fig. 15
① 90° angle bracket
② Stationary part EasyStart Remote+
③ Fan control box “EasyFan”

PREMOUNT SECOND WATER PUMP FOR HEAT EXCHANGER CIRCUIT
(see photo 16)

Insert the second water pump for the heat exchanger circuit in the water pump holder.

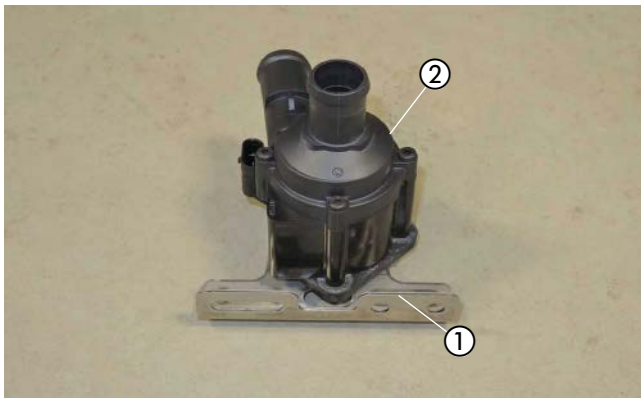

Fig. 16
① Holder, water pump
② Water pump

4 INSTALLATION

PREPARE THE INSTALLATION POSITION
(see photos 17 and 18)

The installation position is on the left-hand side at the crossbeam behind the gearbox when viewed in the direction of travel.

Mark the first point for drilling in the dimensions as shown and drill a 9 mm Ø hole.

Insert an M6 blind rivet nut into the drilled hole.

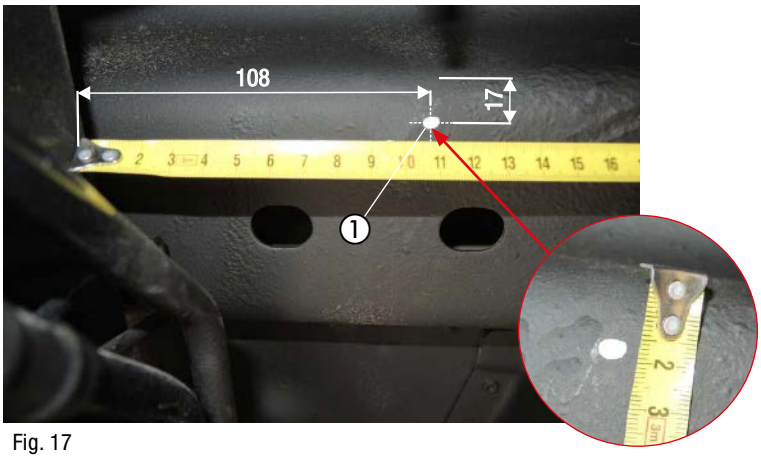

Fig. 17
① Mark drilling point and drill 9 mm Ø hole

Hold the unit bracket at the drilled hole, align horizontally and mark the other three drilling points.

Drill the three holes with 9 mm Ø and insert an M6 blind rivet nut in each hole.

CAUTION!
Deburr all drilled holes and treat with anti-corrosion agent.

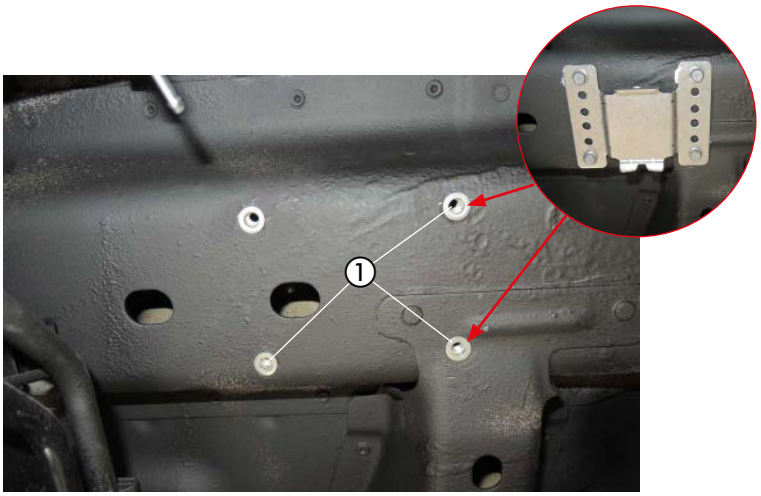

Fig. 18
① Mark three more drilling points and drill three more 9 mm Ø holes

MOUNT HEATER HOLDER
(see photo 19)

Fit the heater holder to the M6 blind rivet nuts using four M6 x 16 screws as shown.

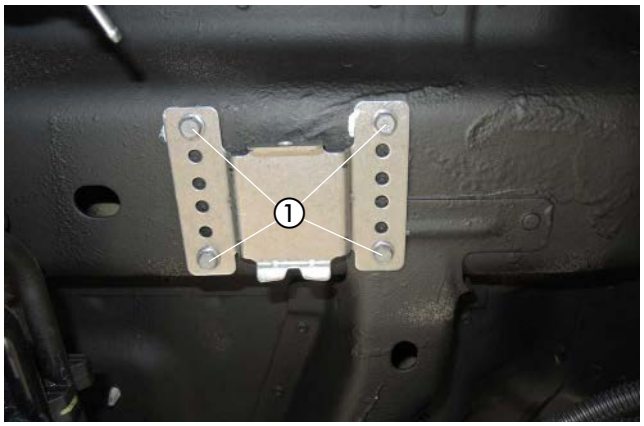

Fig. 19
① Mount heater holder with four M6 x 16 screws

4 INSTALLATION

INSTALL HEATER
(see photo 20)

Install the heater in the unit bracket as shown and fasten to the unit bracket using a self-tapping M6 x 16 mm Torx screw.

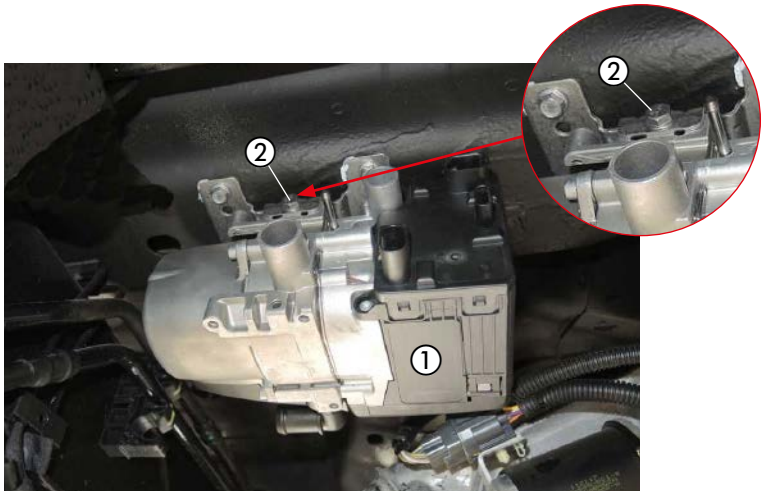

Fig. 20
① Heater
② Self-tapping M6 x 16 mm Torx screw

LAY COMBUSTION AIR PIPE
(see photos 21 and 22)

Connect the combustion air pipe to the heater using a 16 - 25 mm Ø hose clip.

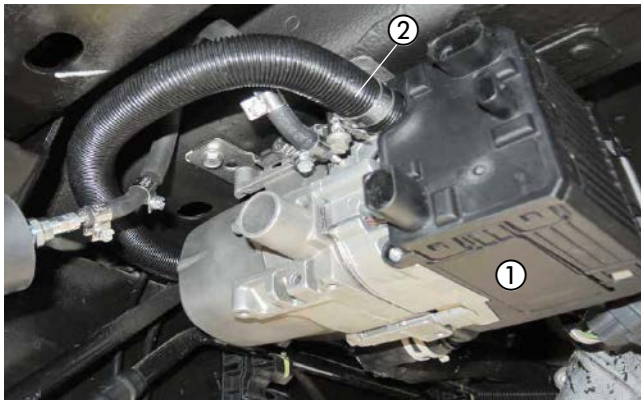

Fig. 21
① Heater
② Connect combustion air pipe

Lay the combustion air pipe to the front into the protected area above the left-hand vehicle frame.

⚠ CAUTION!
Lay the combustion air silencer so that only clean, dry combustion air can be drawn in through the heater.

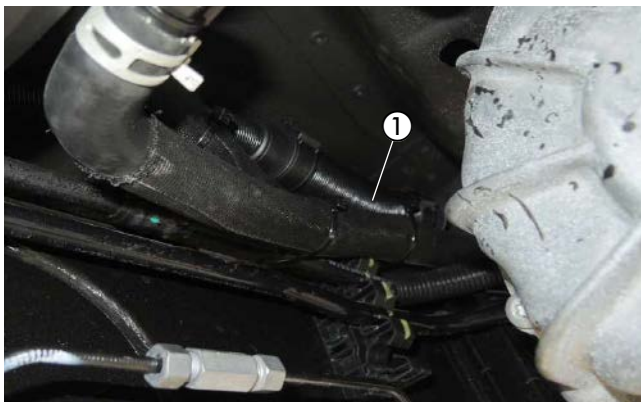

Fig. 22
① Lay combustion air pipe

4 INSTALLATION

MOUNT EXHAUST SYSTEM
(see photos 23 to 25)

Drill a 9 mm Ø hole in the crossbeam behind the heater in the dimensions as shown and insert an M6 blind rivet nut.

CAUTION!
Deburr all drilled holes and treat with anti-corrosion agent.

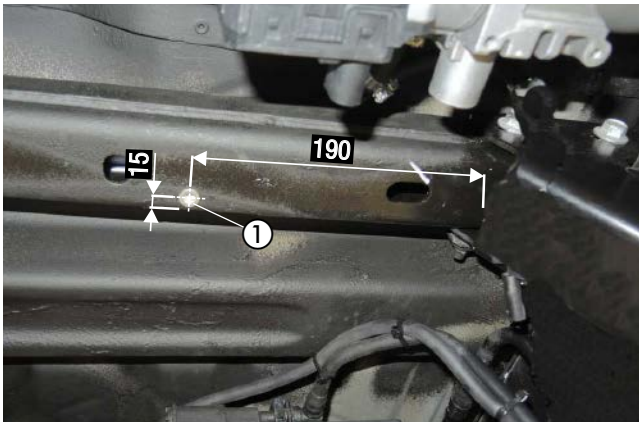

Fig. 23
① Drill 9 mm Ø hole and insert an M6 blind rivet nut

Fasten the prepared exhaust silencer to the M6 blind rivet nut using an M6 x 16 screw and align as shown.

Shape the exhaust pipe end downwards as shown.

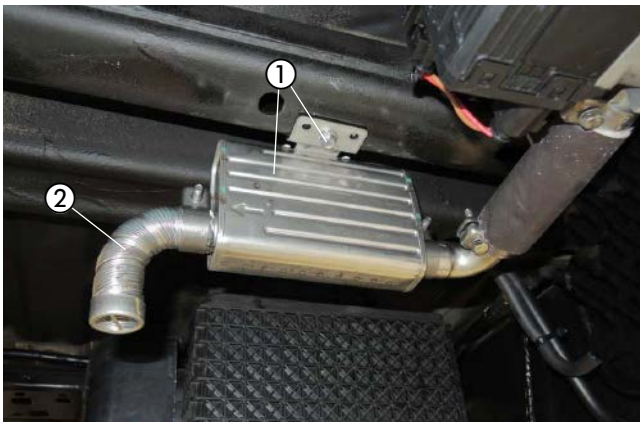

Fig. 24
① Fit prepared exhaust silencer
② Shape exhaust pipe end downwards

Use a clip to connect the exhaust pipe to the exhaust connection of the heater.

CAUTION!
When laying the exhaust pipes, ensure they are at a sufficient distance from adjacent body components.

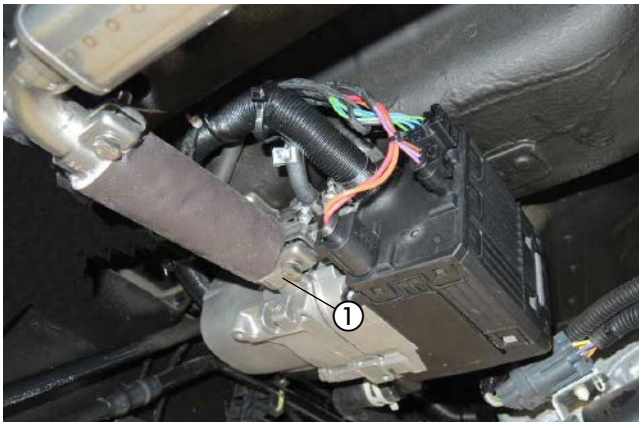

Fig. 25
① Connect the exhaust pipe

4 INSTALLATION

INSTALL WATER PUMP
(see photos 26 and 27)

Insert an M6 blind rivet nut in the existing 9 mm Ø hole on the left inside of the vehicle frame.



Fig. 26
① Insert M6 blind rivet nut

Fasten the prepared water pump to the M6 blind rivet nut using an M6 x 16 screw and align as shown.

The discharge end faces backwards and the intake end faces upwards.



Fig. 27
① Screw M6 x 16
② Install prepared water pump

CUT WATER RETURN HOSE
(see photo 28)

Cut the water return hose from the engine (on the left side of the engine block when viewed in the direction of travel) in the dimensions shown.

Remove the piece of hose that has been cut out; it is no longer needed.

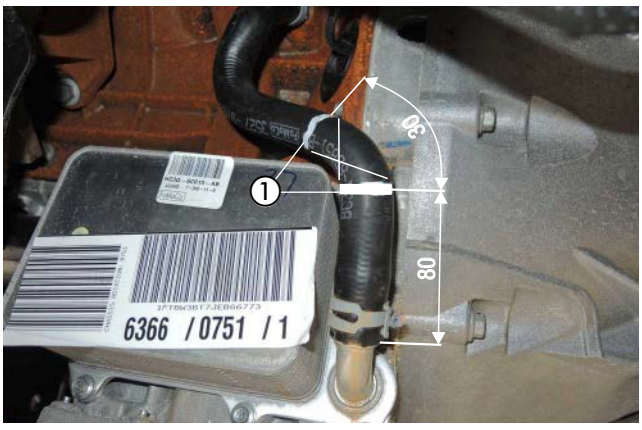

Fig. 28
① Cutting point on water return hose from engine

4 INSTALLATION

CONNECT AND LAY WATER HOSES
(see photos 29 to 32 and photo 39)

Connect water hose 2 to the water inlet connection of the heater with a 26 mm Ø spring band clamp.

Connect water hose 3 to the water outlet connection of the heater with a 26 mm Ø spring band clamp.

Take water hoses 2 and 3 above the vehicle frame to the water pump and fix them to each other with cable ties.

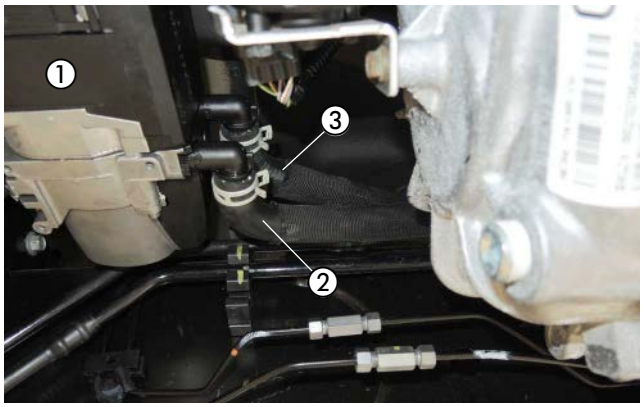

Fig. 29
① Heater
② Connect water hose 2
③ Connect water hose 3

Connect water hose 2 to the discharge end of the water pump using a 26 mm Ø spring band clamp.

Connect water hose 1 to the intake end of the water pump with a 26 mm Ø spring band clamp.

Take water hoses 1 and 3 on to the cutting point in the water return hose and fix them to each other with cable ties.

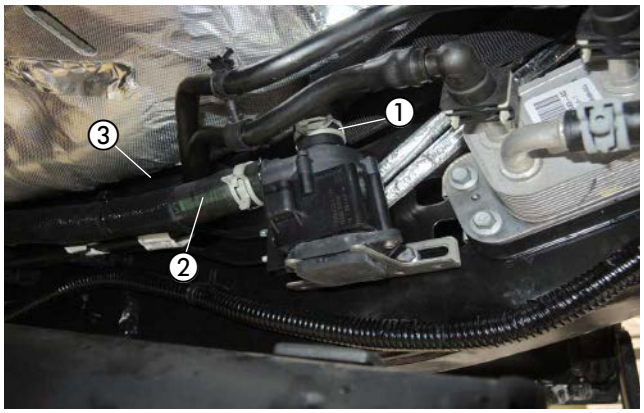

Fig. 30
① Connect water hose 1 to the intake end
② Connect water hose 2 to the discharge end
③ Water hose 3

Use the 20/18 mm Ø reducer and a 20-32 mm Ø hose clip to connect water hose 1 to the water return hose piece to the oil cooler.

Use the 20/18 mm Ø reducer and a 20-32 mm Ø hose clip to connect water hose 3 to the water return hose piece to the engine block.



Fig. 31
① Connect water hose 1
② Two rotatable hose holders
③ Connect water hose 3

4 INSTALLATION

Fix water hoses 1 and 3 to each other using two rotatable hose holders.

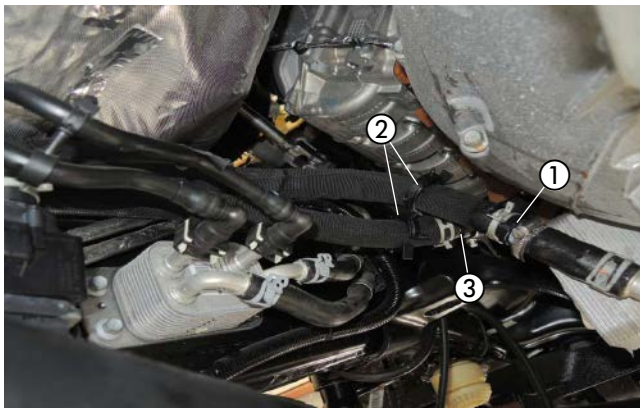

Fig. 32
① Water hose 1
② Two rotatable hose holders
③ Water hose 3

⚠ CAUTION!
Secure all hose connections with hose clips.
Protect the water hoses against chafing and use cable ties to secure in suitable positions.

MOUNT AND CONNECT SECOND WATER PUMP
(see photos 33 to 39)

Push the spacer sleeve onto the lower stud bolt at the fastening point of the aircon pipe and fasten the second water pump with an M6 nut, aligning as shown.

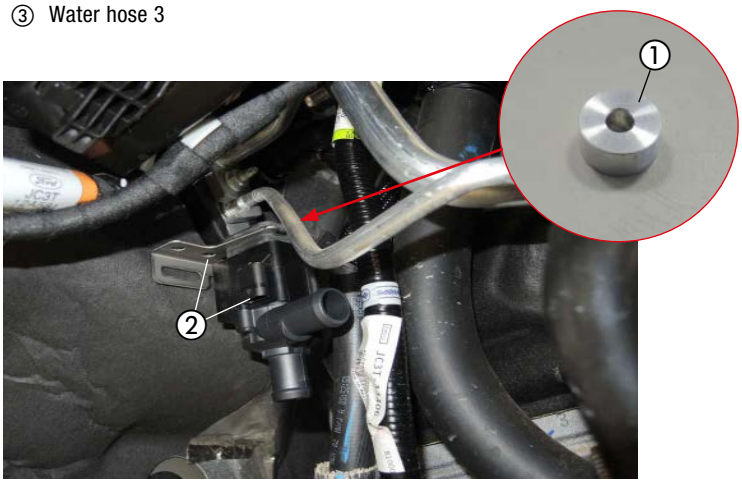

Fig. 33
① Spacer sleeve
② Install second prepared water pump

Prepare the 180° water hose elbow and the pressure side water hose as shown.

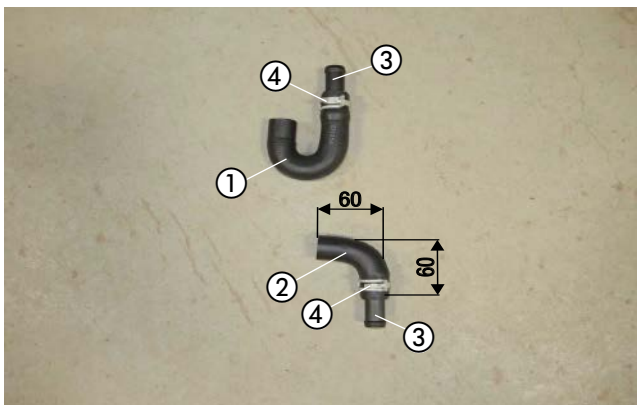

Fig. 34
① 180° water hose elbow
② Pressure side water hose
③ Reducer 20/18 mm Ø
④ Spring band clamp 26 mm Ø

4 INSTALLATION

Cut the water return hose from the heat exchanger (on the right-hand side of the vehicle when viewed in the direction of travel) in the dimensions shown.

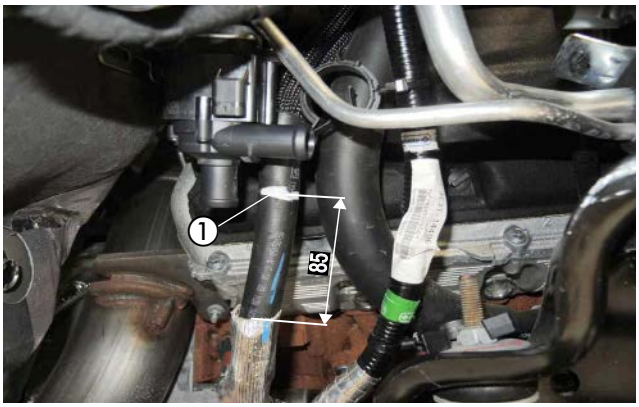

Fig. 35
① Cutting point on water return hose from heat exchanger

Connect the prepared 180° water hose elbow to the water return hose from the heat exchanger using a 20 - 32 mm Ø hose clip.

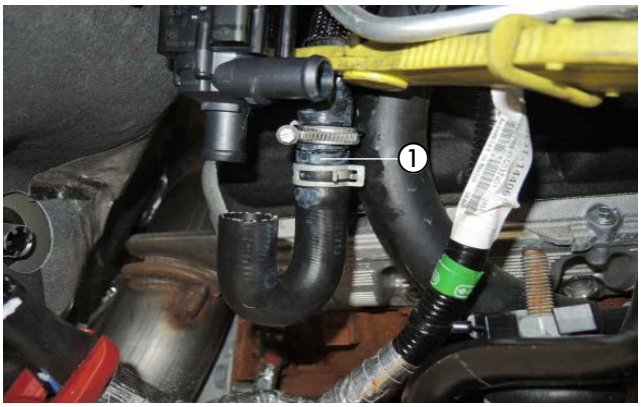

Fig. 36
① Connect prepared 180° water hose elbow to water return hose from heat exchanger

Connect the prepared pressure side water hose with a 20 - 32 Ø mm hose clip to the water return hose to the engine and use a 26 mm Ø spring band clamp to connect to the discharge end of the water pump.

Fasten the 180° water hose elbow to the intake end of the water pump with a 26 mm Ø spring band clamp.

Secure the water return hose to the engine with two rotatable hose holders to the vehicle's cable loom.

⚠ CAUTION!
Secure all hose connections with hose clips.
Protect the water hoses against chafing and use cable ties to secure in suitable positions.

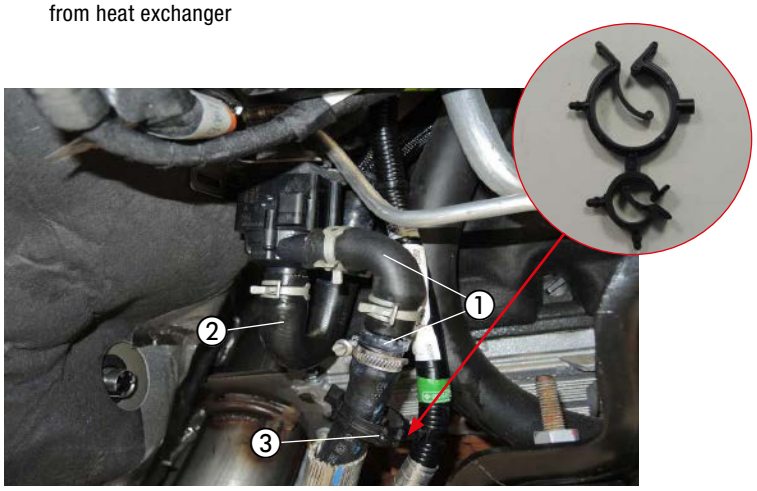

Fig. 37
① Connect prepared pressure side water hose
② Connect 180° water hose elbow at intake end
③ Two rotatable hose holders

4 INSTALLATION

Connect the short cable loom for the water pump to the second water pump and take up to the relay installation position.

The relay is fitted on the right next to the engine control unit.

Secure the water pump cable loom to the vehicle cable loom using a cable tape.

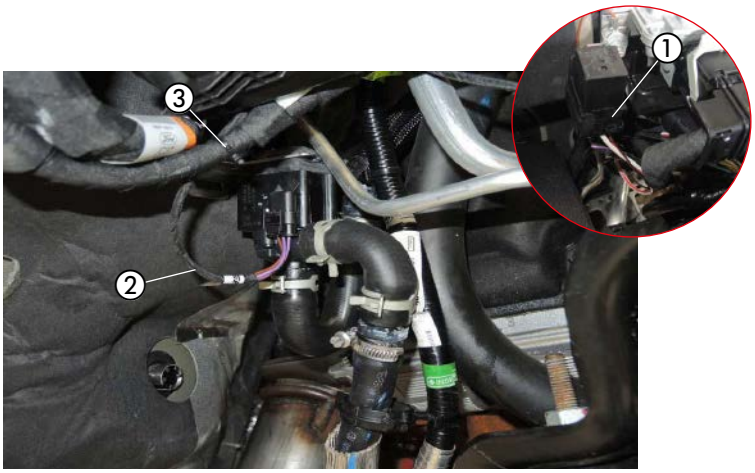

Fig. 38
① Installation position relay second water pump
② Connect short cable loom to water pump
③ Cable tape

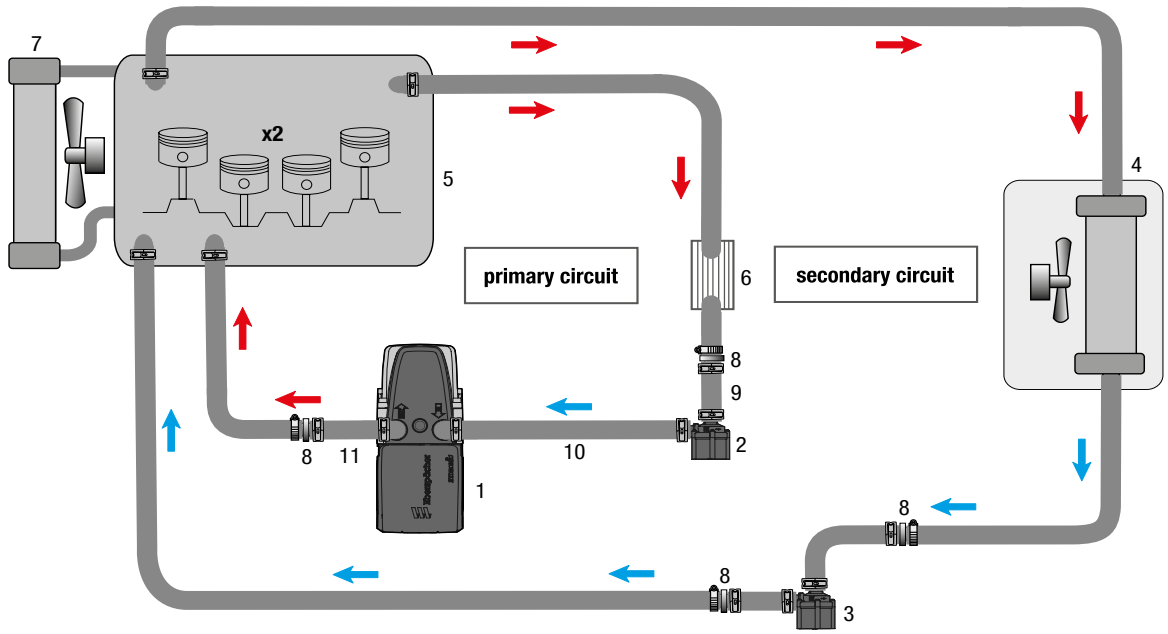

1 - Heater Hydronic S3
2 - Water pump 1
3 - Water pump 2
4 - Vehicle heat exchanger
5 - Engine
6 - Oil cooler
7 - Vehicle radiator
8 - Reducer, 20/15 mm Ø, Reducer, 20/18 mm Ø
9 - Water hose 1
10 - Water hose 2
11 - Water hose 3
Spring band clip 6 mm Ø
- Hose clip, 20 – 32 mm Ø

Fig. 39

4 INSTALLATION

MAKE TANK CONNECTION
(see photos 40 to 44)

Remove the fuel tank according to the manufacturer's instructions. Dismantle the tank fitting, disconnect the plug-in connection and the fuel lines from the tank fitting.

Mark the drilling point in the dimensions as shown.

Remove the sticker from the tank fitting.

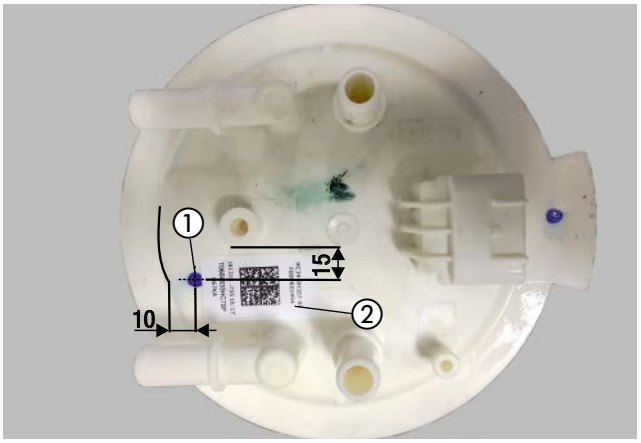

Fig. 40
① Mark drilling point
② Remove sticker from tank fitting

Drill an 8 mm Ø hole in the marked position in the upper part of the tank fitting.

Adhere the sticker to the tank fitting as shown.

⚠ CAUTION!
Make sure no impurities enter the tank when drilling the tank fitting.

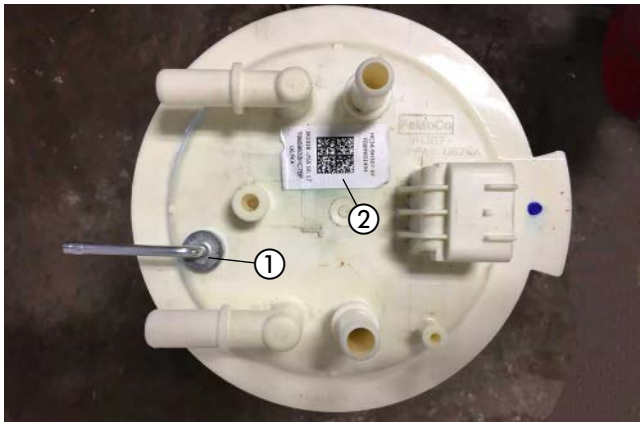

Fig. 41
① Mount tank extractor
② Adhere sticker to tank fitting

Introduce the prepared tank extractor through the hole, align as shown and screw firmly with the M8 nut from below.

⚠ CAUTION!
The tank fitting should not be removed for longer than 10 minutes because of the expansion of the fuel tank!

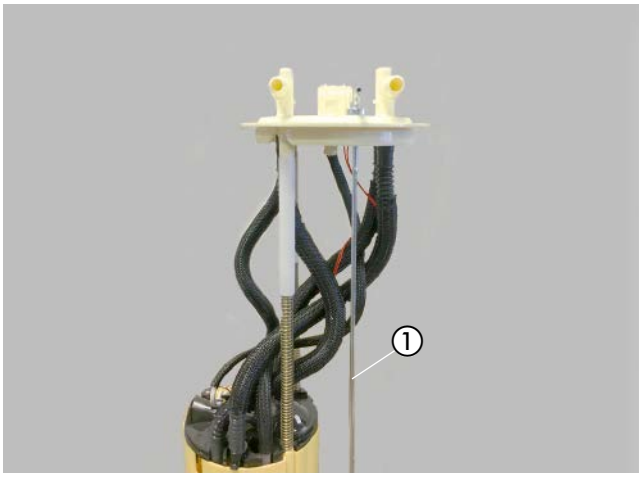

Fig. 42
① Mount tank extractor

4 INSTALLATION

Insert the tank fitting back into the tank and fasten with the locking ring; ensure the seal fits properly.

At the intake connection of the fuel tank extractor, connect the fuel pipe (suction line) with the 3.5 x 3 mm Ø fuel hose.

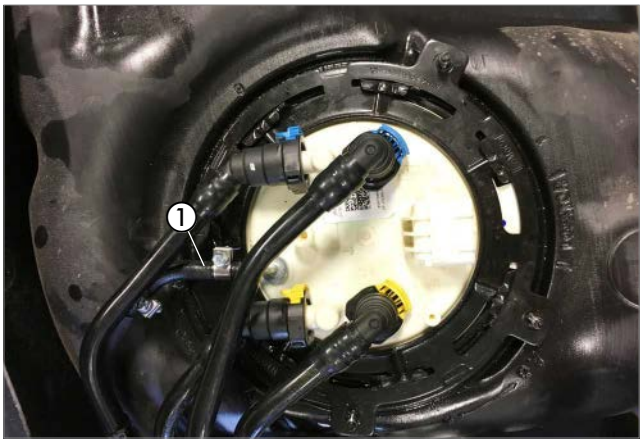

Fig. 43
① Connect fuel pipe (suction line)

Take the fuel pipe (suction line) in front of the tank and fasten with cable ties as shown.

Re-install the fuel tank.

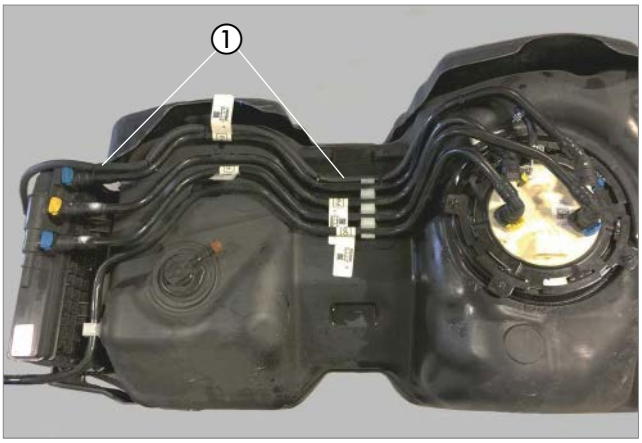

Fig. 44
① Take fuel pipe (suction line) in front of tank

PLEASE NOTE!
Secure all connection points with clamps.

INSTALL AND CONNECT THE METERING PUMP
(see photos 45 to 48)

Drill a 9 mm Ø hole in the support on the left vehicle frame in the dimensions shown.

Insert an M6 blind rivet nut into the drilled hole.

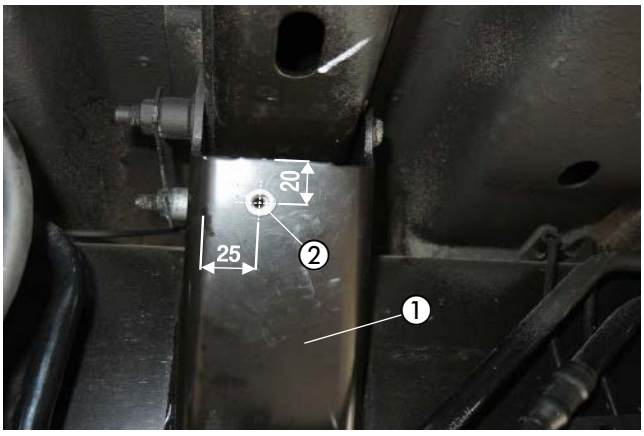

Fig. 45
① Support on left vehicle frame
② Install the blind rivet nut M6

CAUTION!
Deburr all drilled holes and treat with anti-corrosion agent.

4 INSTALLATION

Mount the premounted metering pump to the M6 blind rivet nut with an M6 x 16 screw.
Ensure it is installed with at least a 15° rising gradient on the pressure side.
Route the fuel pipe (suction line) from the tank extractor to the metering pump and connect with the 3.5 x 3 mm Ø fuel hose to the intake connection of the metering pump.

Connect the fuel pipe (pressure line) with the 3.5 x 3 mm Ø fuel hose to the discharge end of the metering pump and use the 4.5 x 3.5 Ø mm adapter to connect to the fuel connection of the heater.

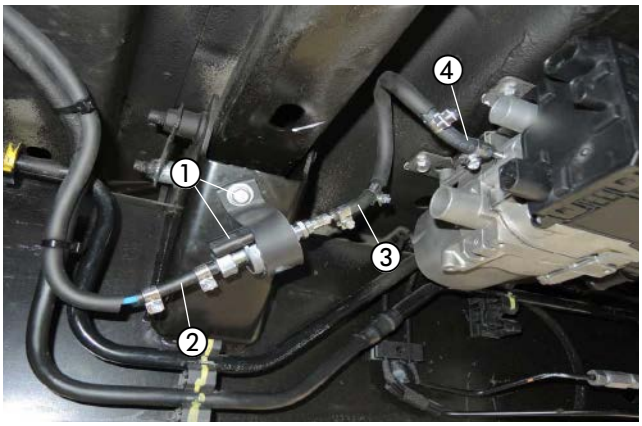

Fig. 46
① Install and connect the metering pump
② Metering pump intake end
③ Metering pump discharge end
④ Connect 4.5 x 3.5 mm Ø adapter to heater

Plug in the connector of the main cable harness, the water pump cable loom and the power supply cable loom to the heater.

Slot the plug-in contacts of the metering pump cable into the mating connector regardless of polarity.

Connect the connector to the metering pump.

⚠ CAUTION!
Use a sharp knife to cut the fuel pipe to length.
Secure all hose connections with hose clips.



Fig. 47
① Plug in electrical connections at heater
② Connect connector to metering pump

Take the water pump cable loom along the water hoses to the water pump and connect as shown.



Fig. 48
① Connect cable loom to water pump

4 INSTALLATION

INSTALL FUSE HOLDER
(see photo 49)

Mount the premounted holder with fuse block to the existing ground point on the left wing support using the existing M6 screw.

⚠ CAUTION!
When laying the cable looms, ensure they are at an adequate distance from hot vehicle and heater parts.
Use cable ties to fix the cable looms in suitable places.



Fig. 49
① Mount premounted holder with fuse block on existing ground point on left wing support

CABLE LAYING
(see photo 50)

Connect the 4 mm² ws/rt cable and 1 mm² sw/rt cable from the installation kit with the 4 mm² ws/rt cables and the 1 mm² sw/rt cable from the vehicle interior cable loom using two butt-type connectors (yellow and red) as shown in the circuit diagram.
Take the connected 4 mm² ws/rt cables and 1 mm² sw/rt cable behind the insulation mat to the passenger side.

Take the vehicle interior cable loom consisting of:
- 4 mm² ws/rt and 1 mm² sw/rt cable
- 3-wire control unit cable loom
- 4-pin fan control box cable loom

through the vehicle cable grommet on the driver's side of the engine partition into the interior of the vehicle.

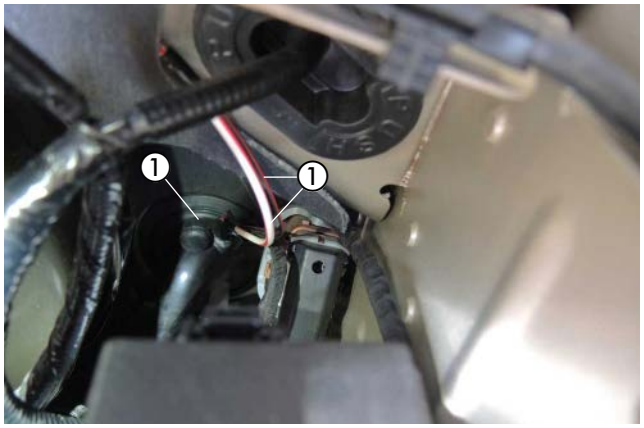

Fig. 50
① Vehicle cable grommet
② Connect the 4 mm² ws/rt cables and 1 mm² sw/rt cable and take behind the insulation mat to the passenger side

POWER SUPPLY
(see photo 51)

Route the 4 mm² rt positive cable to the positive terminal of the battery and connect with cable lug A6.

Route the 2.5 mm² br earth cable to the negative terminal of the battery and connect with the A6 cable lug.



Fig. 51
① Connect positive cable 4 mm² rt
② Connect 2.5 mm² br earth cable

4 INSTALLATION

CONNECT SECOND WATER PUMP
(see photos 52 to 56)

Unclip the 4 mm² sw, 4 mm² sw/vi and 0.5 br cables from the relay block.

The 4 mm² sw and 4 mm² sw/vi cables are no longer needed.

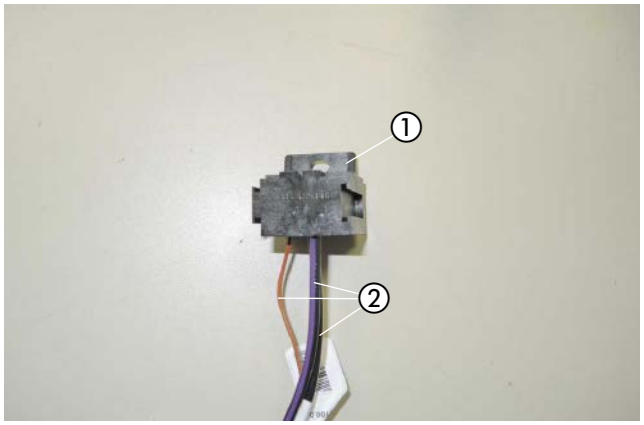

Fig. 52
① Relay block
② Unclip 4 mm² sw, 4 mm² sw/vi and 0.5 br cables

Mount the holder 2603 to the relay block with an M5 x 10 screw and align as shown.

Cut the 0.5 mm² br cable to a length of 150 mm and crimp on an A6 cable lug.

Keep the 12V relay ready for installation.

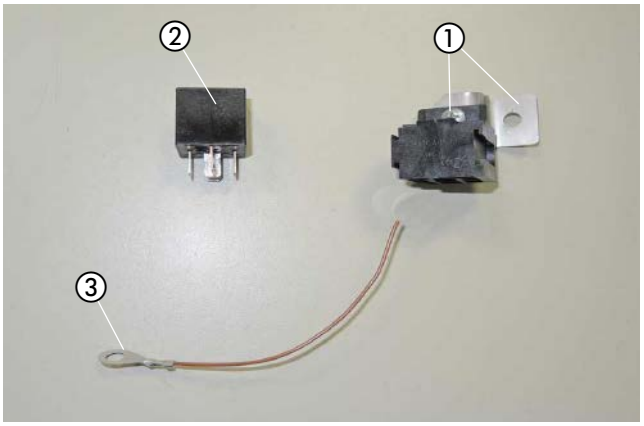

Fig. 53
① Mount holder 2603 to relay block
② Relay 12V
③ Cable lug A6

Fit a receptacle onto the 4 mm² ws/rt cable from the vehicle interior cable loom and slot into chamber 3 (30) of the relay block.

Fit a receptacle onto the 0.5 mm² sw/rt cable from the vehicle interior cable loom and slot into chamber 1 (86) of the relay block.

Cut the plug off the cable loom of the second water pump and fit a receptacle onto the 1 mm² vi cable and slot into chamber 5 (87) of the relay block.

Fit one joint receptacle to the 1 mm² br cable from the cable loom of the second water pump and the 0.5 mm² br cable with A6 cable lug and slot into chamber 2 (85).
Insulate the 0.75 mm² vi/rt cable and tie it back.

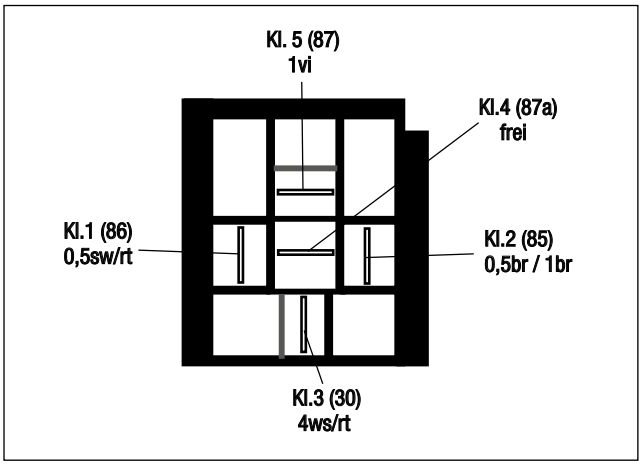

Fig. 54
View of connector block from the cable entry side

4 INSTALLATION

Fasten the prepared relay block together with the 0.5 mm² br ground cable to the right-hand fastening point of the engine control unit, using a B6 body washer and an M6 nut.

Insert the 12V relay in the relay block.

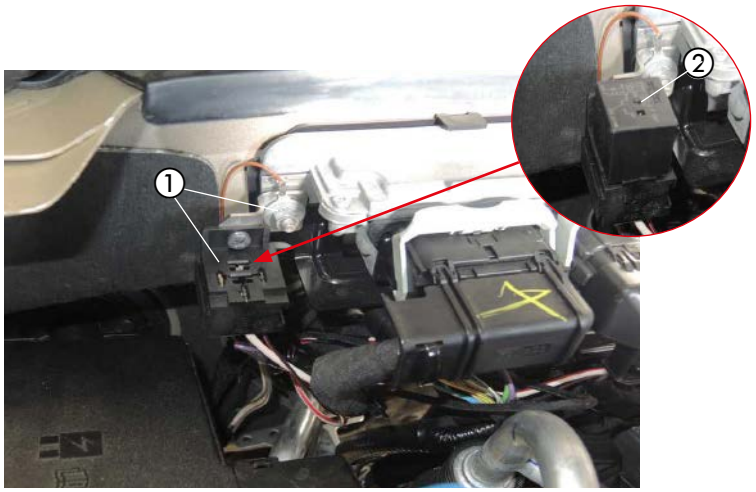

Fig. 55
① Mount prepared relay block
② Insert 12V relay in relay block

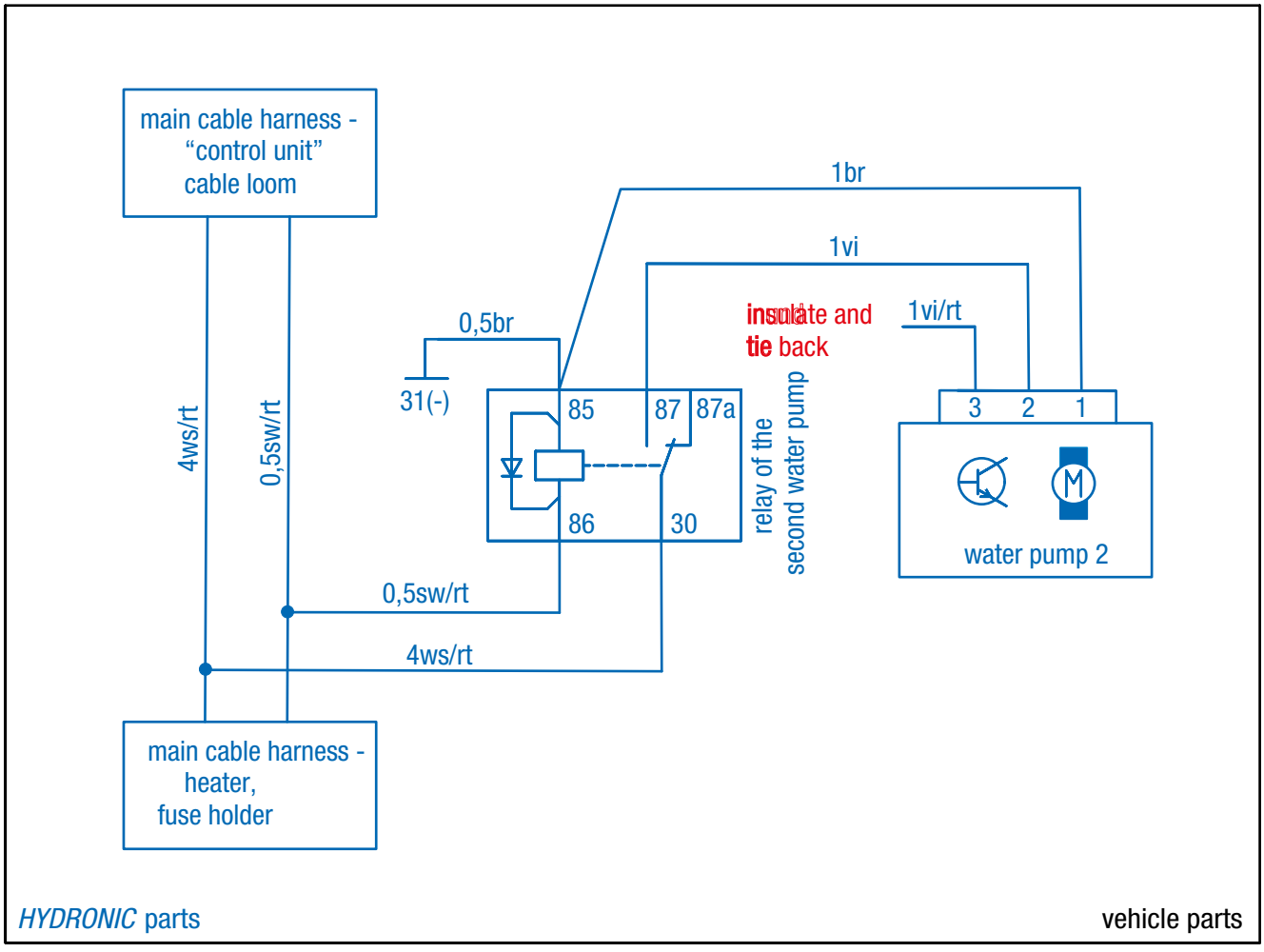

Fig. 56

	ws	sw	rt	vi	br	ge	gr	bl
D	white	black	red	violet	brown	yellow	grey	blue
GB	white	black	red	violet	brown	yellow	grey	blue

4 INSTALLATION

FAN CONTROL
(see photos 57 to 61)

Mount the fan control box and the stationary part of the EasyStart Remote+ with an M6 x 16 screw and a B6 body washer to the existing hole in the support on the left next to the clutch pedal on the left side of the vehicle as shown.

Insulate the 4 mm² ws/rt cable of the “vehicle interior” cable loom and tie it back.

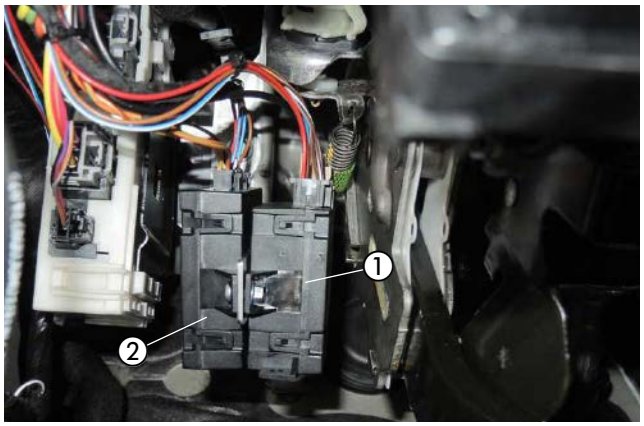

Fig. 57
① Stationary part of the EasyStart Remote+
② Fan control box

Connect the 0.5 mm² sw/rt cable from the “control unit” cable loom with the 0.5 mm² sw/rt cable from the EasyFan fan control box as shown in the circuit diagram using an 0.5 - 1.5 mm² butt-type connector.

⚠ CAUTION!
If the “EasyScan” diagnostic system is present, change the coding to “EasyFan installed”.
This enables the CAN interface to the “EasyFan” fan control box for diagnosis of the “EasyFan” fan control box. Analogue activation via black/red is thus disabled and no longer needed.
To this end, insulate and tie back the 0.5 mm² sw/rt cable from the vehicle interior cable loom and from the fan control box.

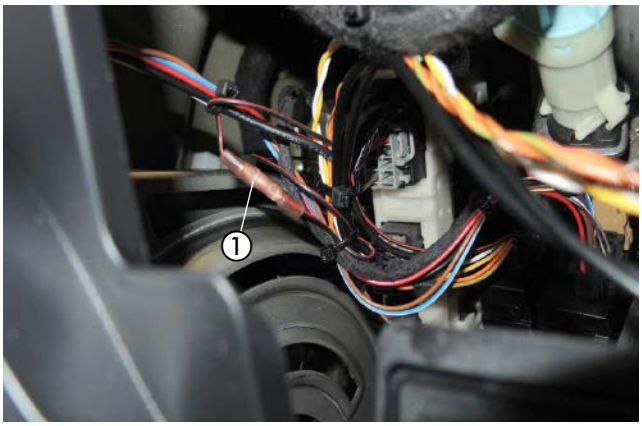

Fig. 58
① Connect 0.5 mm² sw/rt cable from the vehicle interior cable loom with 0.5 mm² sw/rt cable from the fan control box

Take the cable loom from the EasyFan fan control box to the aircon control.

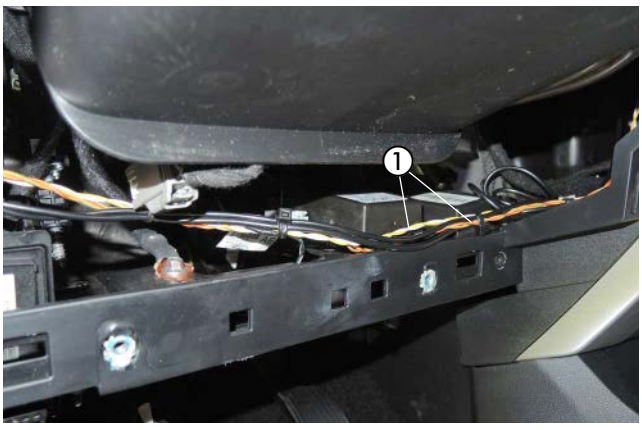

Fig. 59
① Take cable loom from EasyFan fan control box to aircon control

4 INSTALLATION

Disconnect the 0.5 mm² gr/or cable (pin 17) from the 24-pin black connector of the aircon control and connect the 0.5 mm² ge and 0,5 mm² or/gn cables using two 0.5 - 1.5 mm² butt-type connectors as shown in the circuit diagram.

Disconnect the 0.5 mm² vi/or cable (pin 18) from the 24-pin black connector of the aircon control and connect the 0.5 mm² ws and 0,5 mm² or/br cables using two 0.5 - 1.5 mm² butt-type connectors as shown in the circuit diagram.

PLEASE NOTE!
The cable colours may vary!

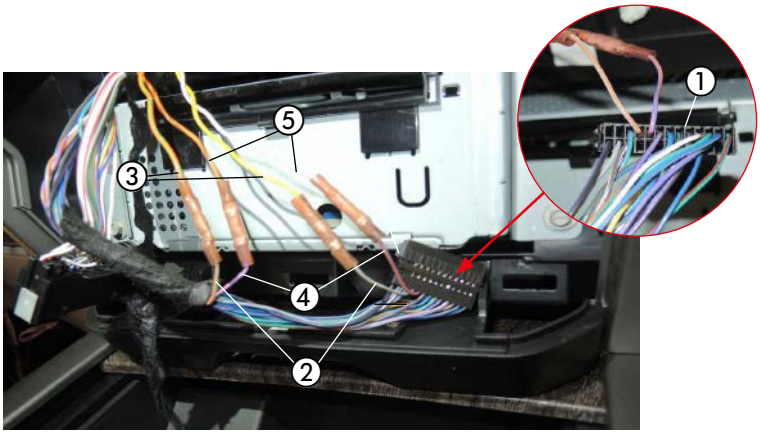

Fig. 60
① 24-pin black connector
② Disconnect 0.5 mm² cable gr/or (pin 17)
③ Insert 0.5 mm² ge and 0.5 mm² or/gn cables
④ Disconnect 0.5 mm² cable vi/or (pin 18)
⑤ Integrate 0.5 mm² ws and 0.5 mm² or/br cables

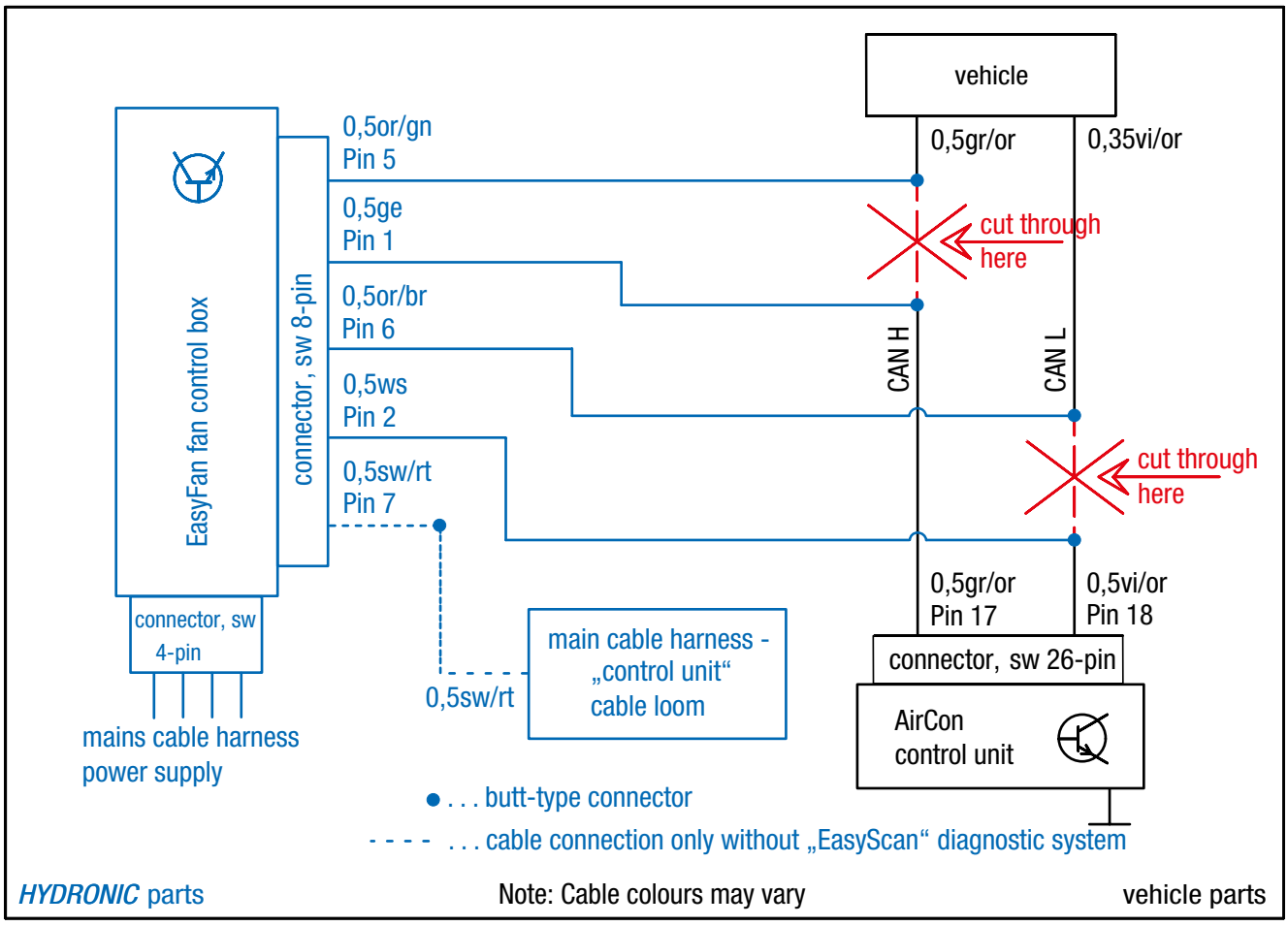

Fig. 61

	ws	sw	rt	vi	br	ge	gr	or
D	white	black	red	violet	brown	yellow	grey	orange
GB	white	black	red	violet	brown	yellow	grey	orange

4 INSTALLATION

INSTALL EASYSTART TIMER
(Alternative suggestion - consult with the customer)
(see photo 62)

The EasyStart Timer is installed according to the “EasyStart Timer” installation instructions.

Mount the EasyStart Timer to the trim moulding of the gearshift lever as shown.



Fig. 62
① Install EasyStart timer

INSTALL EASYSTART REMOTE+ RADIO REMOTE CONTROL
(Alternative suggestion - consult with the customer)
(see photos 63 to 65)

The EasyStart Remote+ is installed according to the Technical Description for the EasyStart Remote / Remote+, refer to the “Installation Instructions” section.

Mount the button of the EasyStart Remote+ in the trim moulding of the instrument panel on the left next to the hazard light switch.
To do so, drill a 10 mm Ø hole in the area and fit the button in the hole.



Fig. 63
① Mount button of the EasyStart Remote+

Fit the EasyStart Remote+ temperature sensor to the left-hand trim moulding of the centre console as shown.

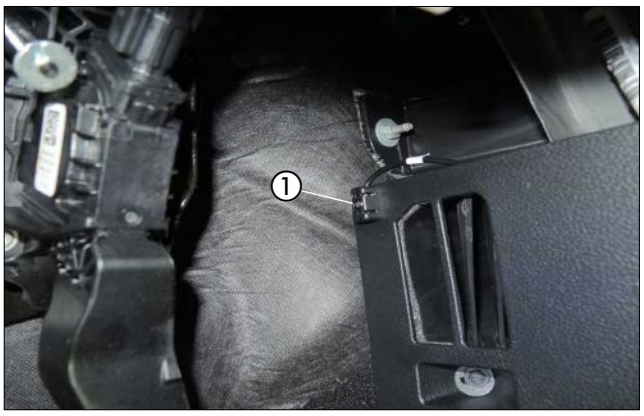

Fig. 64
① Mount the temperature sensor of the EasyStart Remote+

4 INSTALLATION

The stationary part of the EasyStart Remote+ was already fitted when mounting the fan control box.

Connect the antenna cable of the EasyStart Remote+ to the stationary part, take it to the left and lay it in the rubber door seal on the driver's side.

Lay the cables from the installed button and temperature sensor together with the “Control unit” cable loom to the installed position of the stationary part and connect to the stationary part.

CAUTION!
Use cable ties to fix any excessive length of antenna cable underneath the instrument panel.

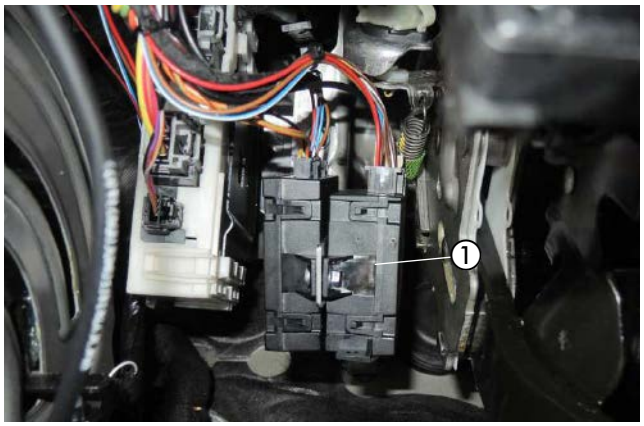

Fig. 65
① Stationary part of the EasyStart Remote+

5 FOLLOWING INSTALLATION

ADHERE THE “REFUEL” LABEL
(see photo 66)

Adhere the “Refuel” label inside the fuel tank flap as shown.



Fig. 66
① Adhere the “Refuel” label

COMPLETE THE VEHICLE

- Install all removed parts in the reverse order.
- Reconnect the battery.
- Check that the hoses, hose clips and pipe clamps as well as all electrical connections are fitted securely.
- Use cable ties to secure all loose cables, lines, etc.
- Restore all the vehicle's programmed settings (radio, window lift, etc.).
- Fill the cooling system, start the engine, vent the cooling system and check for leaks, top up any missing coolant liquid up to the marking (arrow).
- Adhere the duplicate nameplate in a clearly visible position near the heater or at a suitable point on the B-pillar.
- Adhere the “Refuel” label in the fuel tank flap or at a suitable point on the B-pillar.
- Please also note and follow the vehicle manufacturer's information on filling and venting the cooling system.
- Read and observe all official regulations and safety instructions in the Technical Description.
- Program the control unit and place the operating instructions in the glove compartment.
- Place the leaflet for the customer in the glove compartment or hand over personally to the customer.

⚠ CAUTION!
Fill the cooling system only with the coolant liquid specified by the vehicle manufacturer.

STARTING UP THE HEATER

- Switch on the heater at the control.
  See Operating Instructions - Control.

6 PARTS OVERVIEW



Fig. 67

7 INITIAL COMMISSIONING (EASYSTART TIMER)

INITIAL COMMISSIONING

For initial commissioning, the following steps must be carried out one after the other.

APPLYING THE OPERATING VOLTAGE

The operating voltage is applied by inserting the fuse A5 into the fuse holder.
After applying the operating voltage INIT appears in the display.

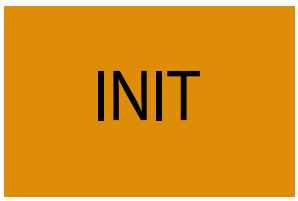

Note: The timer checks which type of heater is connected and configures the Menu bar (automatic detection).

SET THE TIME

Use the ◄ or ► button to set the hours.

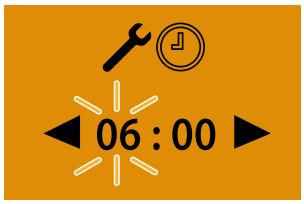

Press the ▭ button to confirm the setting.

Use the ◄ or ► button to set the minutes.

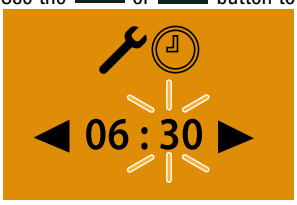

Press the ▭ button to confirm the setting.

SET WEEKDAY

Use the ◄ or ► button to set the weekday.

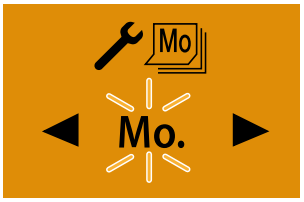

Press the ▭ button to confirm the setting.
Then configure the EasyStart Timer.

7 INITIAL COMMISSIONING (EASYSTART TIMER)

CHAMBER ASSIGNMENT OF CONNECTOR HOUSING (ITEM 4) AND BUSH HOUSING (ITEM 5)
(Assignment seen from the cable inlet side)

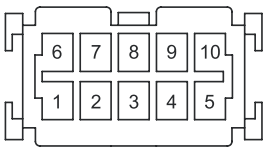

-XS10 (Pos. 4)

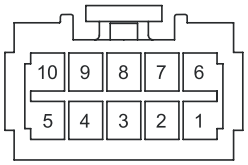

-XB10 (Pos. 5)

-XS10 / -XB10 CONNECTOR PIN ASSIGNMENT TABLE

Pin	Signal	Cable colour	Cross section
1	Terminal 30	red	0.35 mm^2
2	Terminal 58	grey / black	0.22 mm^2
3	Terminal 31	brown	0.35 mm^2
4	Diagnostics	blue / white	0.22 mm^2
5	DAT cable	violet	0.22 mm^2
6	S^+	yellow	0.35 mm^2
7	ADR	brown / yellow	0.22 mm^2
8	ADR	white / red	0.22 mm^2
9	Temp (-)	brown / white	0.22 mm^2
10	Temp (+)	grey	0.22 mm^2

7 INITIAL COMMISSIONING (EASYSTART REMOTE+)

CARRY OUT INITIAL COMMISSIONING

For initial commissioning, the following steps must be carried out one after the other.

INSERT THE BATTERY INTO THE MOBILE UNIT

Insert the supplied battery in the mobile unit, as described in the EasyStart Remote+ operating instructions, in the “Maintenance / Replacing the Battery” chapter. Do not activate the mobile unit yet.

APPLYING THE OPERATING VOLTAGE

The operating voltage is applied by inserting the fuse into the fuse holder.

AUTOMATIC DETECTION

Five seconds after applying the operating voltage the button's LED starts to light up. The radio remote control now checks which heater is connected and configures the user prompting of the mobile unit.

TEACHING THE MOBILE UNIT

If the button's LED starts to flash, the mobile unit can be taught.

NOTE ON THE ADD TEACHING MODE

The **Add** function can be used to teach up to 4 mobile units to one stationary part; but only one mobile unit can make contact with the stationary part

Notes on the AddE teaching mode

The **AddE** is only used to teach the current mobile unit. All previously taught mobile units are deleted.

PLEASE NOTE!

If the mobile unit is not taught within 30 seconds, the button's LED indicator goes out.
Press the button until the LED starts to flash. Then teach the mobile unit.

TEACH MOBILE UNIT - ADD TEACH MODE

Press the  or  button, Add is displayed.



Confirm Add teach mode by pressing the  button.

Teach mobile unit - AddE teach mode
Use the  or  button to select **AddE**.



Confirm AddE teach mode with the  button.

7 INITIAL COMMISSIONING (EASYSTART REMOTE+)

AFTER CONFIRMING ADD OR ADDE

SET THE TIME

Use the ◄ or ► button to set the hours

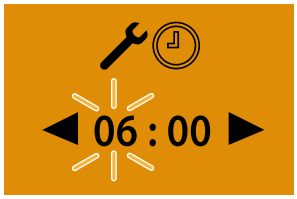

Press the ▭ button to confirm the setting

Use the ◄ or ► button to set the minutes

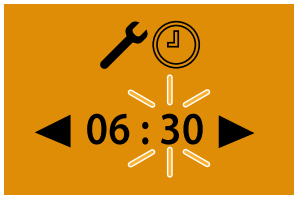

- Press the ▭ button to confirm the setting
- Set weekday Use the ◄ or ► button to set the weekdays

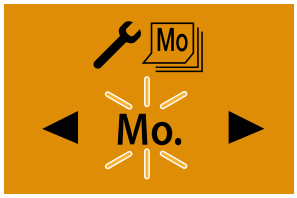

Press the ▭ button to confirm the setting. Then configure the EasyStart Remote+.

Teach an additional mobile unit

Press the button installed in the vehicle until the button's LED starts to flash.

Press the ▭ or ▭ button on the mobile unit, Add is displayed.

Confirm teach mode with the ▭ button.



The additional mobile unit is taught.

CONFIGURE EASYSTART REMOTE+

The system must be configured according to its use.

7 PIN CONFIGURATION (EASYSTART REMOTE+)

CONNECTING THE CONNECTOR HOUSING TO THE STATIONARY PART

Attach the tab connector to the control unit lead harness.
Clip the control unit lead harness and the button lead harness into 12-pin connector housing.
(Connector housing pin assignment)
Push the contact locking device into the connector housing.
Connect the 12-pin connector housing to the stationary part.

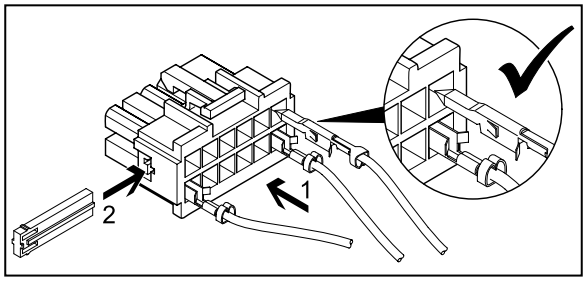

PLEASE NOTE!

- When installing the connector, ensure that the locking tongues always face the middle of the connector. Only in this position do the tongues latch into the housing (see sketch).

PIN ASSIGNMENT AT THE STATIONARY PART

PIN	SIGNAL	CABLE COLOUR
1	Terminal 30 (plus)	red
2	-	
3	Terminal 31 (plus)	brown
4	JE diagnostics / DAT cable	blue / white / vi
5	-	
6	Button LED (+)	red / yellow
7	Button (+)	brown / yellow
8	Button (-)	brown
9	-	
10	-	
11	-	
12	-	

Connector housing chamber assignment -XB12 (assignment seen from the cable inlet side)

8 DIAGNOSTICS

EASYSTART TIMER / REMOTE+ WORKSHOP MENU

The service functions listed in the following can be displayed, read out and / or changed via the vehicle workshop menu.

NOTE!

- A reset (remove 5A fuse) is necessary to activate some functions. To do this, not and follow the relevant note under “Comments” of the “Service functions overview”.
- To correct the fault, refer to the heater's repair instructions.

OPENING THE VEHICLE WORKSHOP MENU

Display ON, the Start display appears.

Use the ◄ or ► button to select the symbol in the Menu bar.

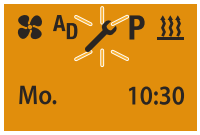

Confirm the SETTINGS menu item by pressing the button.

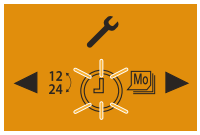

Press the LONGPRESS button for longer than 5 sec.; the Workshop menu is displayed.

Press the ◄ or ► button to select the required function, e.g. »2: Select temperature unit, °C or °F« and confirm by pressing the button.

Use the ◄ or ► button to select the temperature units °C or °F.

Press the button to confirm the selection.

Press the button to exit the workshop menu.

SERVICE FUNCTIONS OVERVIEW

Menu item	Service function	Comments
1.1.1:	Heater 1 – display current fault	The heater must be switched on to detect current faults. “no diag” is displayed if no diagnostics cable is connected.
1.1.2:	Heater 2 – display current fault	The heater must be switched on to detect current faults. “no diag” is displayed if no diagnostics cable is connected.
1.2.1:	Heater 1 – read out fault memory F1 – F5	Display fault memory F1 – F5 with error code, e.g.: F1: 12. “no diag” is displayed if no diagnostics cable is connected.
1.2.2:	Heater 2 – read out fault memory F1 – F5	Display fault memory F1 – F5 with error code, e.g.: F1: 12. “no diag” is displayed if no diagnostics cable is connected.
1.3.1:	Heater 1 – delete fault memory F1 – F5	Select the delete → function by pressing the button, the DEL display appears, flashing, press the button to confirm. “no diag” is displayed if no diagnostics cable is connected.
1.3.2:	Heater 2 – delete fault memory F1 – F5	Select the delete → function by pressing the button, the DEL display appears, flashing, press the button to confirm. “no diag” is displayed if no diagnostics cable is connected.
1.4.1:	Heater 1 – read out operating hours counter	Operating time is displayed in minutes. “no diag” is displayed if no diagnostics cable is connected.
1.4.2:	Heater 2 – read out operating hours counter	Operating time is displayed in minutes. “no diag” is displayed if no diagnostics cable is connected.

LEAFLET FOR THE CUSTOMER

INSTRUCTIONS FOR THE CUSTOMER
(see photo 1)

- No adjustments are necessary to the aircon control.

When the vehicle is unlocked (during pre-heater mode), the fan control is already disabled by the pre-heater.
The original functionalities are available when the ignition is switched on.
After locking the vehicle, it takes a few minutes for the pre-heater to activate the fan control box.



Fig. 1
① AirCon control unit

RECOMMENDATION!

- Switch the pre-heater on at least once a month for about 10 minutes, also in the summer months!
  This will ensure that it works properly during the season!
- We recommend adjusting the heating time to the driving time: Driving time > heating time.
- The heating time should be at least 45 min.

PLEASE NOTE!

In vehicles with interior monitoring, this must be disabled for the heating process.
Please refer to the vehicle operating instructions for disabling instructions.

DE

ANSCHLUSSKONSTELLATIONEN FÜR HYDRONIC S3 12V CS

DE

Bitte beachten: Nur gültig für folgende Hydronic S3 Ausführungsvarianten **mit CAN-Schnittstelle und S+ Schaltausgang:**

Heizgeräte für Otto-Kraftstoff (Benzin)	**Bestell-Nr.**
B 4 E – 12 V CS	20.2007.05.0000
B 5 E – 12 V CS	20.2008.05.0000
Heizgeräte für Dieselkraftstoff	**Bestell-Nr.**
D 4 E – 12 V CS	25.2933.05.0000
D 5 E – 12 V CS	25.2934.05.0000

1 Anschluss Hydronic S3 12V CS an EasyStart Pro / EasyStart Web in Verbindung mit EasyFan

Anschluss über Y-Kabel (Mat.-Nr. 22.1000.35.2800) und Leiter BKRD an Bedienelement und EasyFan.

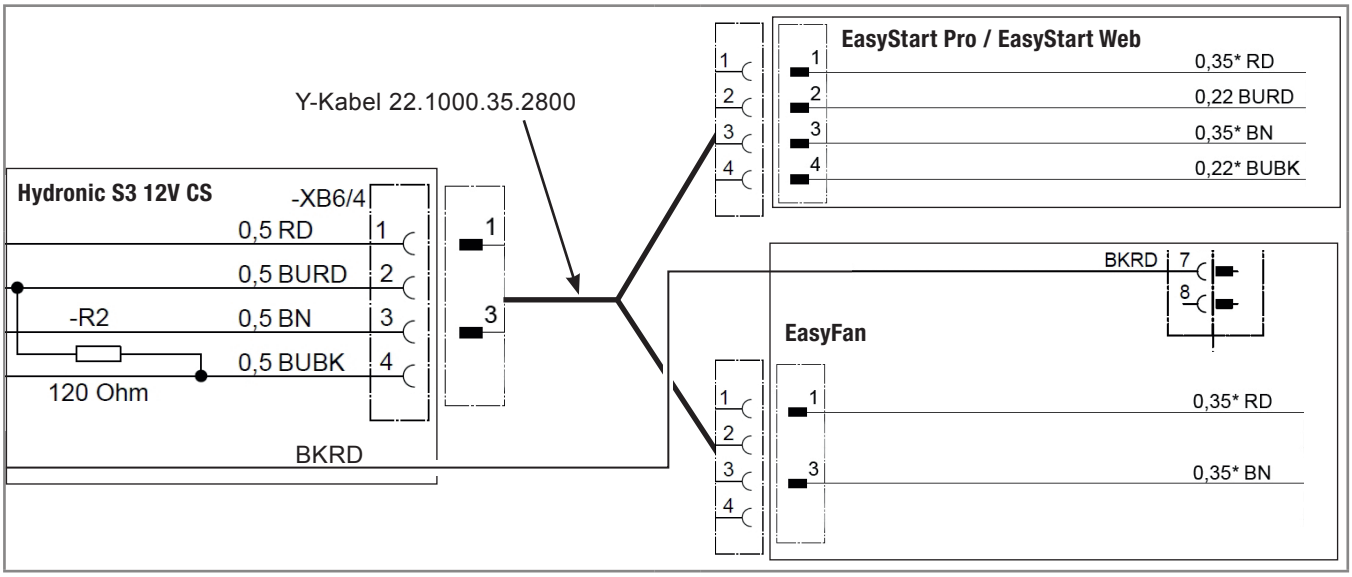

2 Anschluss Hydronic S3 12V CS an 2 x EasyStart Pro / EasyStart Web

Anschluss über Y-Kabel (Mat.-Nr. 22.1000.35.2700) an EasyStart Pro und EasyStart Web.

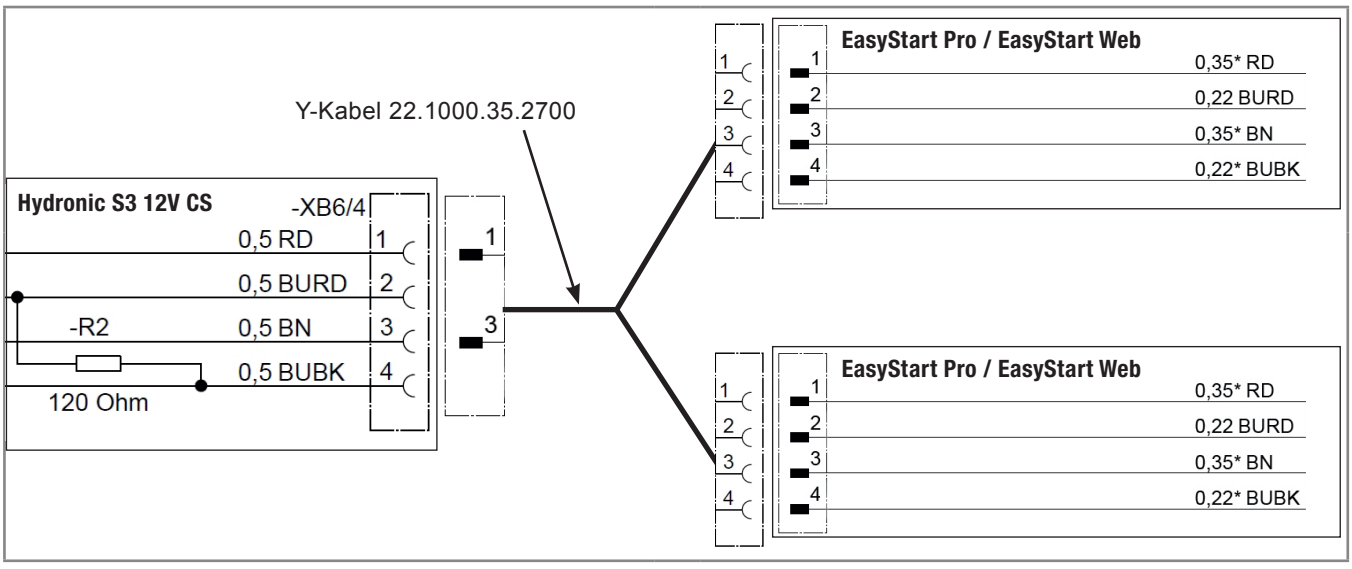

DE

3 Anschluss Hydronic S3 12V CS an EasyStart Remote

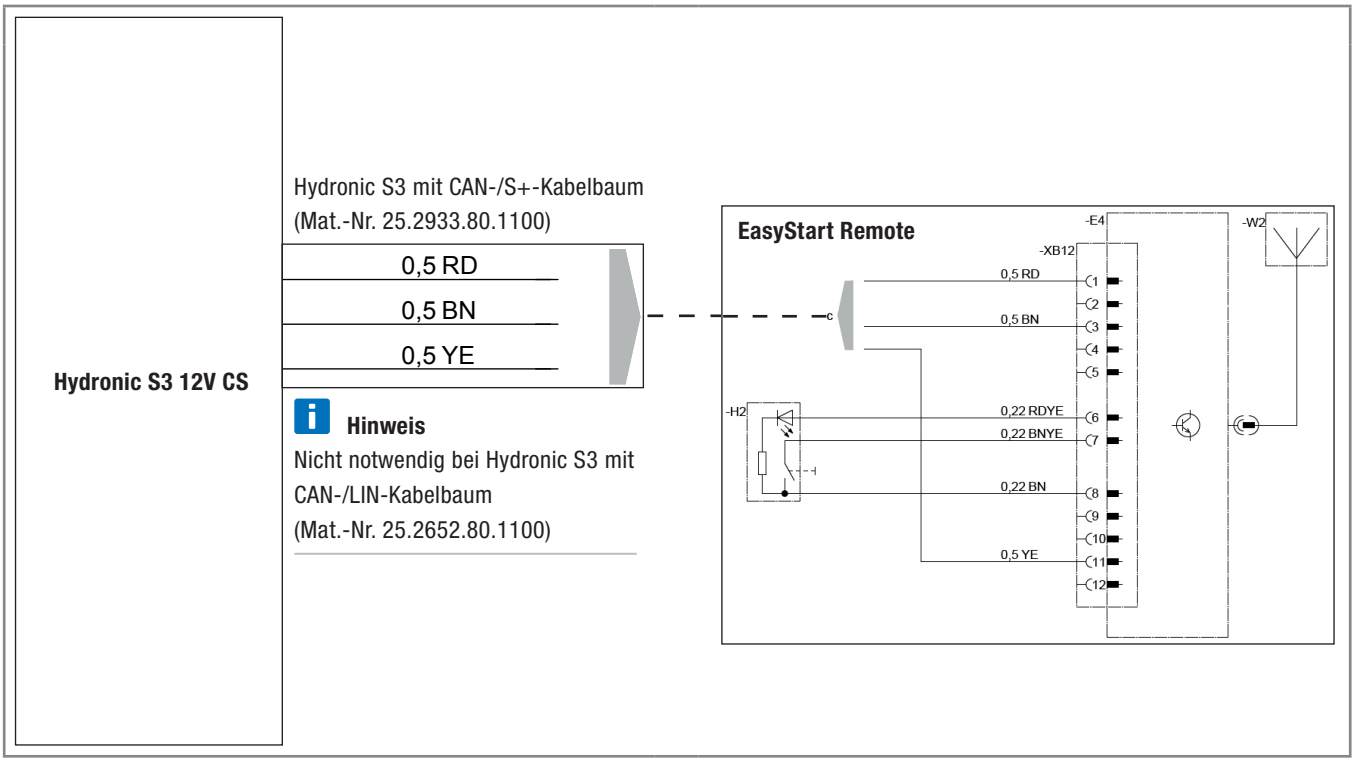

DE

4 Anschluss Hydronic S3 12V CS an EasyStart Remote+

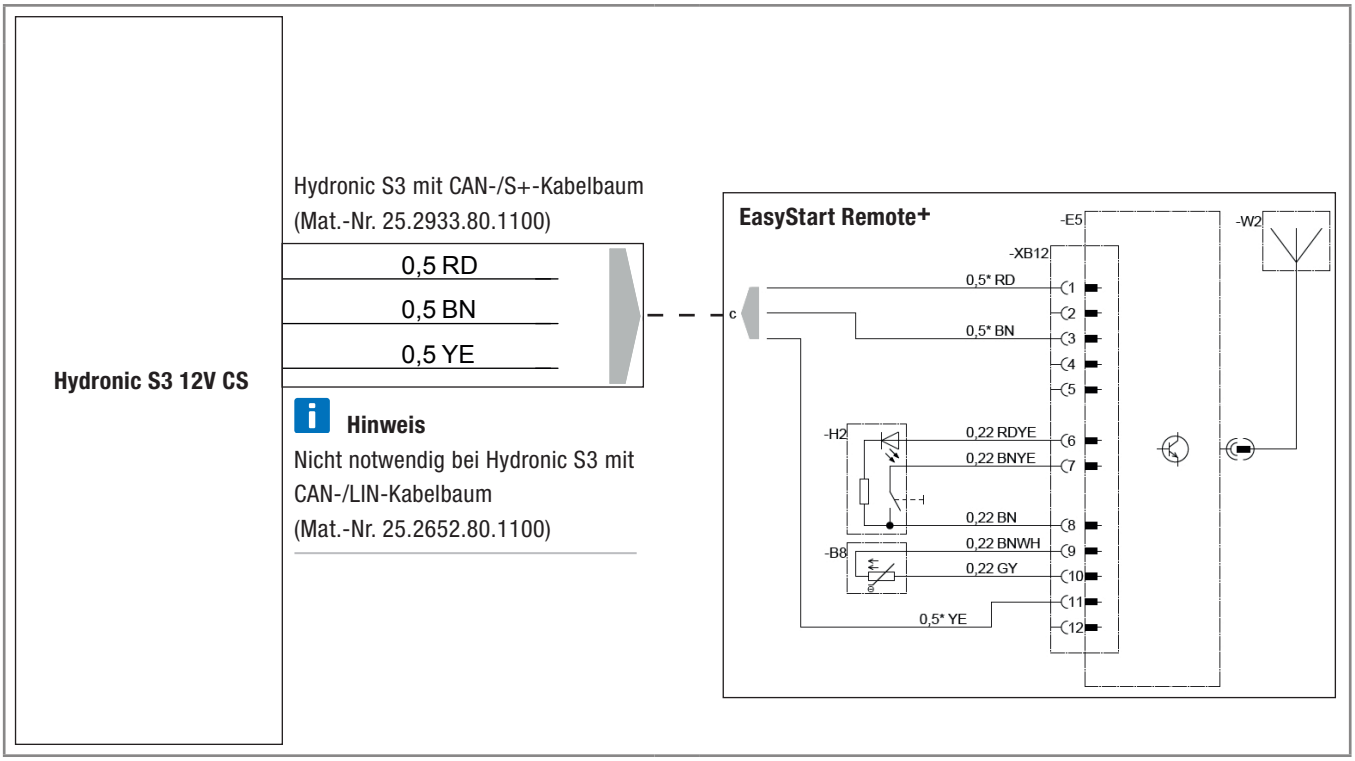

EN

CONNECTION CONSTELLATIONS FOR HYDRONIC S3 12V CS

EN

Please note: Only valid for the following Hydronic S3 versions **with CAN interface and S+ switching output:**

Heaters for petrol	**Order No.**
B 4 E – 12 V CS	20.2007.05.0000
B 5 E – 12 V CS	20.2008.05.0000
Heaters for Diesel	**Order No.**
D 4 E – 12 V CS	25.2933.05.0000
D 5 E – 12 V CS	25.2934.05.0000

1 Connection of Hydronic S3 12V CS to EasyStart Pro / EasyStart Web including EasyFan

Connect via Y cable (Mat.-No. 22.1000.35.2800) and line BKRD to operating element and EasyFan.

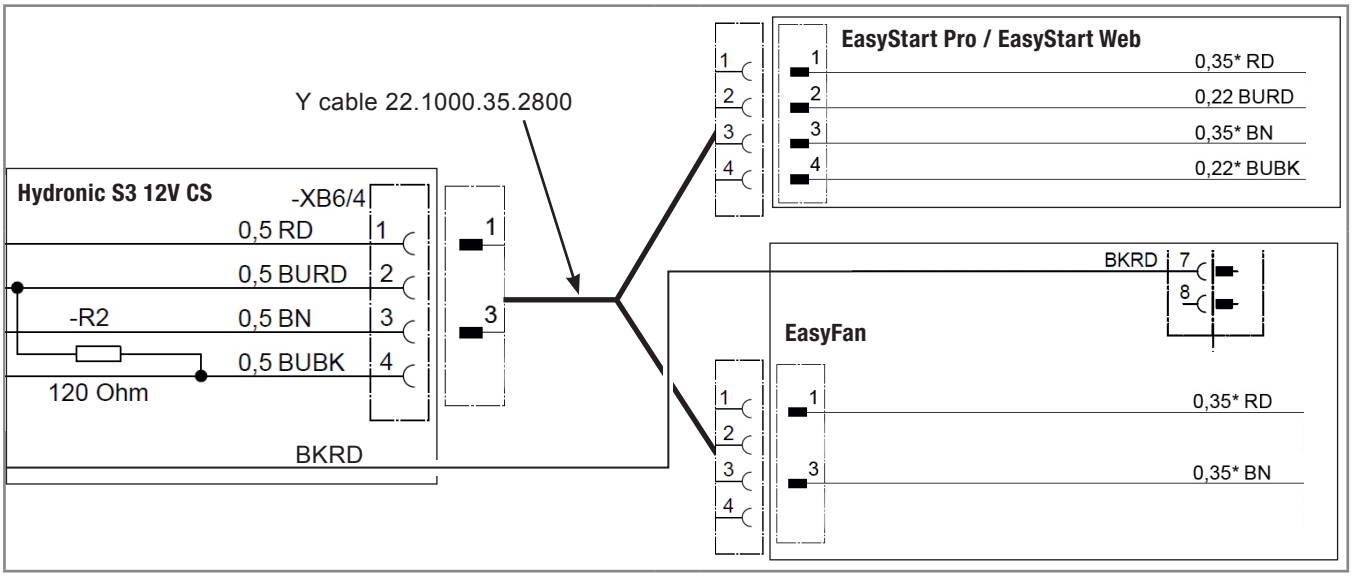

2 Connection of Hydronic S3 12V CS to 2 x EasyStart Pro / EasyStart Web

Connect via Y cable (Mat.-No. 22.1000.35.2700) to EasyStart Pro and EasyStart Web.

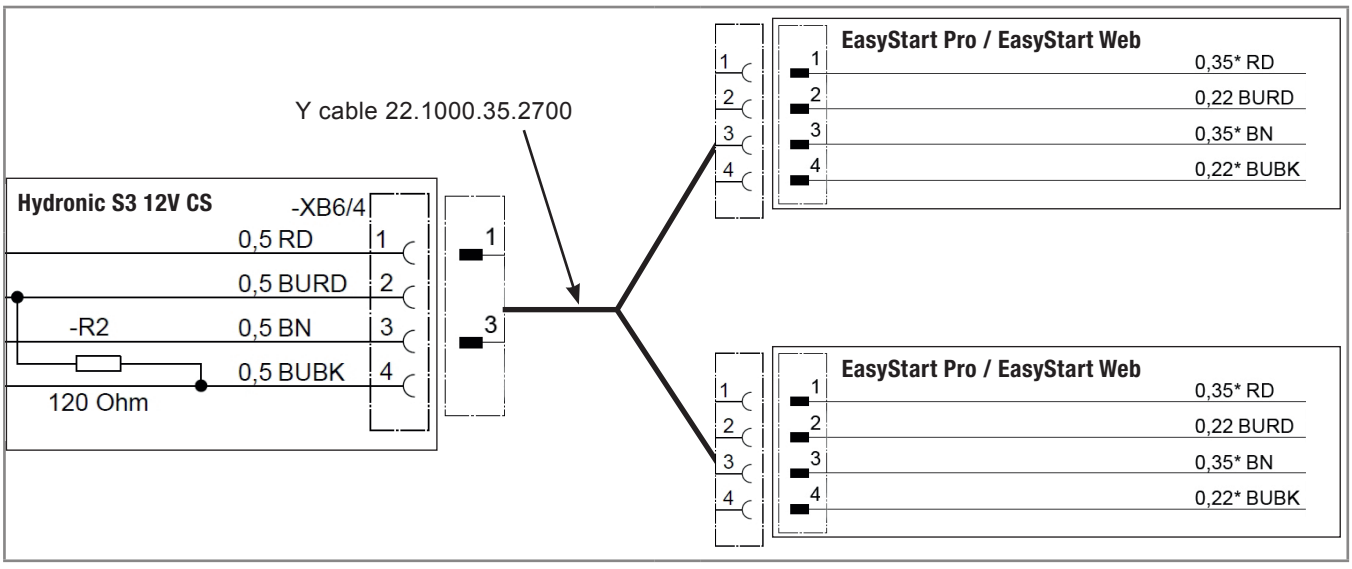

EN

3 Connection of Hydronic S3 12V CS to EasyStart Remote

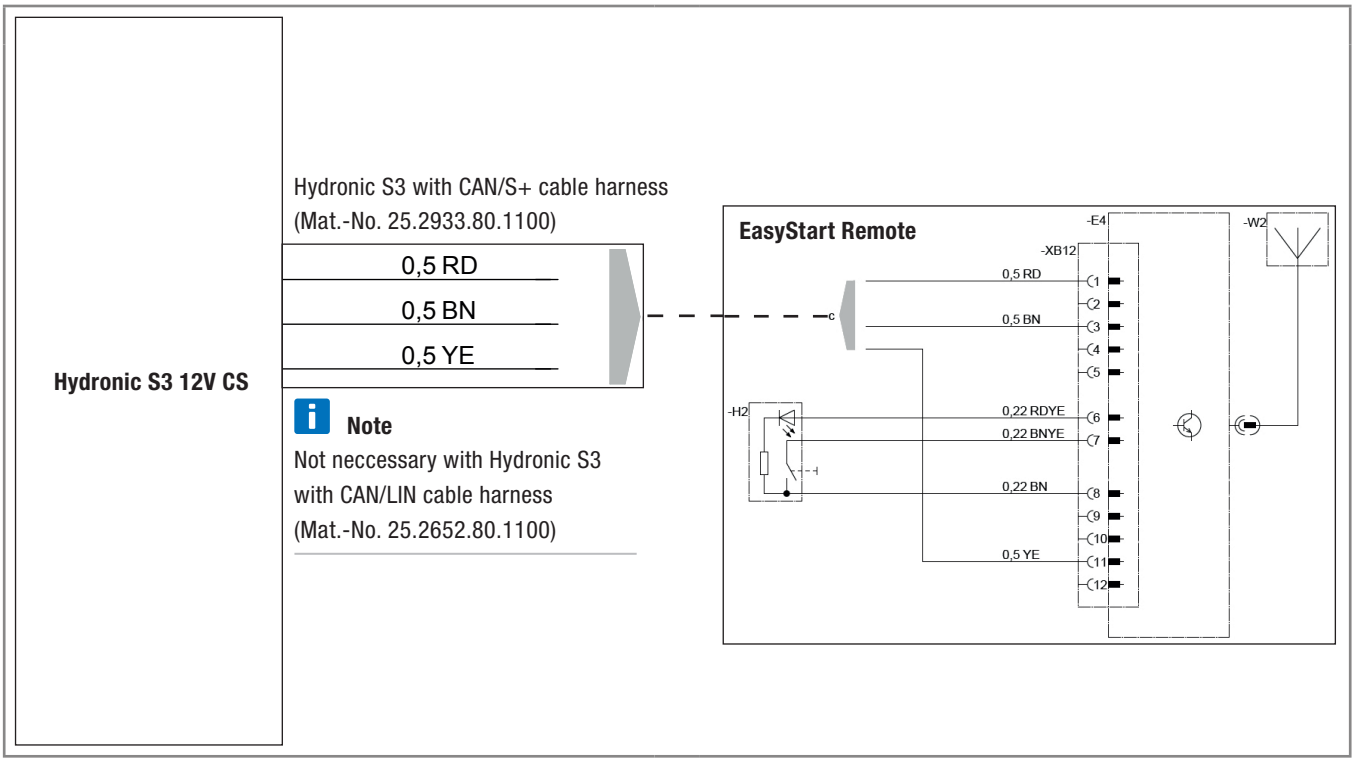

4 Connection of Hydronic S3 12V CS to EasyStart Remote+

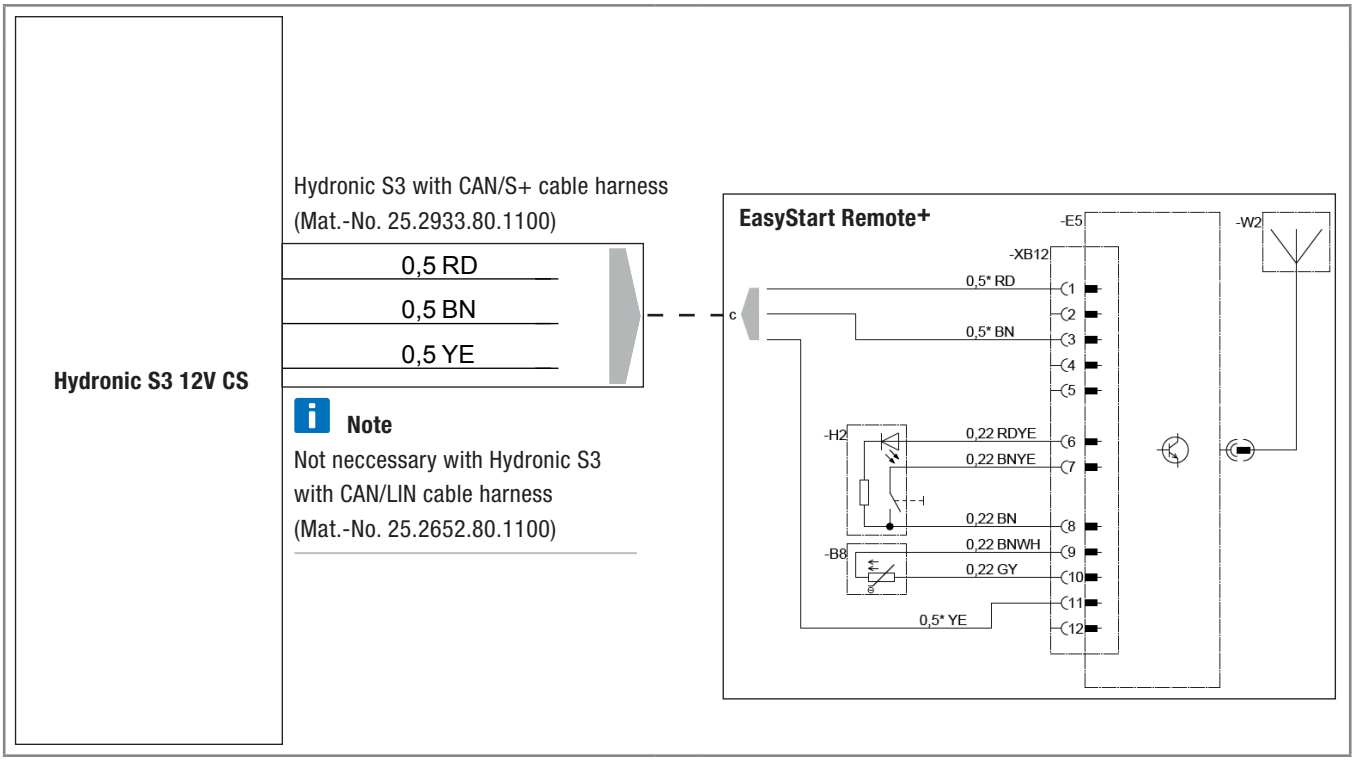

Headquarters:
Eberspächer Climate Control Systems GmbH & Co. KG
Eberspächerstraße 24
73730 Esslingen
Hotline: 03976 2350 235
Fax hotline: 01805 262624
info@eberspaecher.com
www.eberspaecher.com

Eberspächer

25 2921 95 3115 06.2018 EN 06.2018
We reserve the right to make changes © Eberspächer Climate Control Systems GmbH & Co. KG