INSTALLATION RECOMMENDATION
HYDRONIC S3 – B 5 E IN THE FORD KUGA (DM2)



THIS INSTALLATION RECOMMENDATION APPLIES TO VEHICLES FROM MODEL YEAR 2017
WITH THE FOLLOWING MOTORISATION:
1.5 l cubic capacity / 4 cylinder in-line engine EcoBoost / 134 kW - 182 HP (HSN: 8566 / TSN: BMO)
2.0 l cubic capacity / 4 cylinder in-line engine EcoBoost / 178 kW - 242 HP (HSN: 8566 / TSN: BPI)

The brochure “Important Information for Operating Your Pre-Heater” enclosed with the installation kit provides the customer with information on operating the unit.

Please give the customer this brochure when handing over the vehicle, or place it safely in the vehicle.

CONTENTS

CHAPTER	CHAPTER DESCRIPTION	PAGE
1	Introduction	3-5
2	Preparation	6
3	Preliminary assembly	7-13
4	Installation	14-25
5	After installation	26
6	Parts Overview	27

This installation recommendation documents the installation of the Hydronic S3 heater in a vehicle of model year 2017 with the following equipment:

- **with automatic air-conditioning (with automatic temperature control)**
- **with fog lamps**
- **with xenon headlights**
- **with manual transmission**

The following have not been checked:

- **Interior monitoring**
- **Manual air-conditioning**

PLEASE NOTE!

This installation recommendation is valid for the above mentioned vehicle to the exclusion of all liability claims.
Deviating model years and/or deviating equipment may result in modifications to this installation recommendation.
It is therefore mandatory to check the feasibility of installing the heater in the vehicle before starting work.
All liability claims resulting from modifications to the vehicle are excluded.

Installation time: approx. 8 hours

1 INTRODUCTION

SPECIAL TEXT FORMATS, PRESENTATIONS AND PICTURE SYMBOLS

In this installation recommendation, special text formats and picture symbols are used to emphasise different contents. Please refer to the following examples for their meanings and appropriate action.

SPECIAL TEXT FORMATS AND PRESENTATIONS

- This dot (▪) denotes a list, which is started by a heading.
  - If an indented dash (–) follows a “dot”, this list is a sub-section of the black dot.

PICTURE SYMBOLS

DANGER!

This information points out a potential serious or fatal danger. Ignoring this information can result in severe injuries.

➔ This arrow indicates the appropriate precaution to take to avert the danger.

CAUTION!

This information points out a dangerous situation for a person and / or the product. Ignoring this information can result in injuries to people and / or damage to equipment.

➔ This arrow indicates the appropriate precaution to take to avert the danger.

PLEASE NOTE!

These remarks contain recommendations for use and useful tips for the operation, installation and repair of the heater.

SAFETY INSTRUCTIONS FOR INSTALLATION AND REPAIR

DANGER!

Improper installation or repair of Eberspächer heaters can cause a fire or result toxic exhaust entering the inside of the vehicle.
This can cause serious and even fatal risks.

➔ Only authorised and trained persons may install the heater according to the specifications in the technical documents or repair it using original spare parts.

➔ Installation and repairs by unauthorised and untrained persons, repairs using non-original spare parts and without the technical documents required for installation and repair are dangerous and therefore are not permitted.

➔ Installation according to this installation recommendation may only be carried out in conjunction with the respective unit-related technical description, installation instructions, operating instructions and maintenance instructions.
This document must be carefully read through before / during installation and repair and followed throughout. Particular attention is to be paid to the official regulations, the safety instructions and the general information.

PLEASE NOTE!

- The relevant rules of sound engineering practice and any information provided by the vehicle manufacturer are to be observed during the installation and repair.
- When carrying out electric welding on the vehicle, the positive cable at the battery should be disconnected and earthed to protect the control box.

LIABILITY CLAIM / WARRANTY

Eberspächer does not accept any liability for defects and damage, which are due to installation or repair by unauthorised and untrained persons.
Compliance with the official regulations and the safety instructions is prerequisite for liability claims.
Failure to comply with the official regulations and safety instructions leads to exclusion of any liability of the heater manufacturer.

ACCIDENT PREVENTION

General accident prevention regulations / health and safety regulations and the corresponding workshop, company and operating safety instructions are to be observed.

1 INTRODUCTION

ADDITIONAL INFORMATION ON THE VALIDITY OF THE INSTALLATION RECOMMENDATION

The installation recommendation is valid for the vehicle with the engine and gearbox options listed in the following.

ENGINE AND GEARBOX OPTIONS

Cubic capacity	kW / HP	Gearbox
1.5l I ECOBOOST	134 / 182	6S
2.0l I ECOBOOST	178 / 242	6A

6S = 6-gear manual gearbox
6A = 6-gear automatic gearbox

PLEASE NOTE!

- The installation recommendation is not valid for right-hand drive vehicles.
- Vehicle models, engine types and feature options not listed in this installation recommendation, have not been tested.
  Installation according to this installation recommendation can still be possible.

INITIAL STARTUP OF THE HEATER OR FUNCTIONAL TEST

- After installation or carrying out a repair on the heater, the coolant circuit and the whole fuel supply system must be carefully vented. Comply with the instructions issued by the vehicle manufacturer.
- Open all heating circuits before the trial run (set the temperature controller to “hot”).
- During the heater trial run, all water and fuel connections must be checked for leaks and secure, tight fit.
- If faults occur while the heater is running, use a diagnostic unit to correct the cause of the fault.

PARTS REQUIRED FOR INSTALLATION

QUANTITY	DESIGNATION	ORDER NO.
1	Hydronic S3 B 4 E	20 1994 05 00 00
1	Vehicle-specific installation kit	24 8000 35 00 11
1	Hydronic S3 B 5 E	20 1993 05 00 00
1	Vehicle-specific installation kit	24 8000 35 00 11
EasyStart control unit as chosen:		
1	EasyStart Web	22 1000 34 51 00
1	EasyStart Remote+	22 1000 34 17 00
1	EasyStart Remote	22 1000 34 23 00
Also to be ordered in vehicles with air-conditioning with automatic temperature control		
1	Aircon kit	24 0357 00 00 20

SPECIAL TOOLS REQUIRED

- Necessary torque wrench
- Anti-corrosion agent
- Pliers for spring band clamps
- Crimping tool
- Step drill

TIGHTENING TORQUES

If no tightening torques are specified, tighten the screw connections according to the following table:

Part name	Tightening torques
Hex screw M6	10 $^{+1}$ Nm
Hex screw M8	20 $^{+2}$ Nm
Hex screw M10	45 $^{+2}$ Nm
Torx screw M6 x 14.5	6 $^{+0.5}$ Nm
Screw M4 x 16	3 $^{+0.5}$ Nm
Screw M5 x 10	5 $^{+0.5}$ Nm
Pipe clip for exhaust pipe	7 $^{+1}$ Nm
Hose clip for water hose	3 $^{+0.5}$ Nm
Hose clip for combustion air pipe	3 $^{+0.5}$ Nm
Hose clip for fuel pipe	1 $^{+0.2}$ Nm

1 INTRODUCTION

INSTALLATION DRAWING

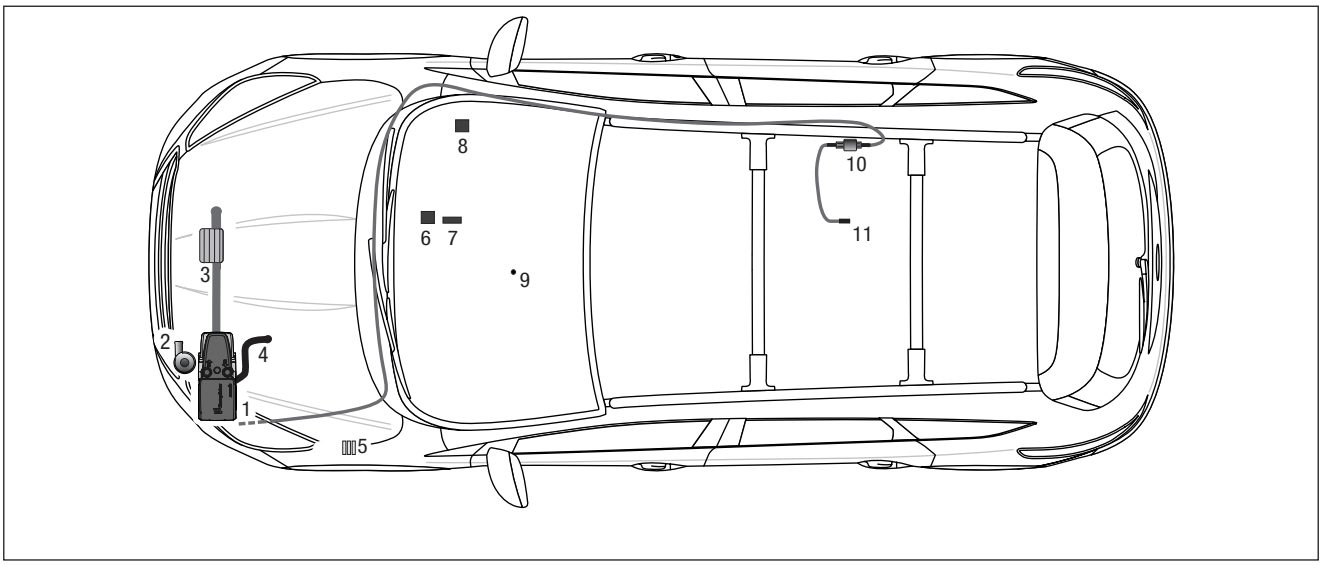

1 Heater
2 Water pump
3 Exhaust pipe with exhaust silencer
4 Combustion air tube
5 Fuse holder
6 Fan relay
7 Fan control box
8 Receiver EasyStart Remote/Remote+/Web
9 Button EasyStart Remote/Remote+/Web
10 Metering pump
11 Fuel tank extractor

2 PREPARATION OF THE VEHICLE

PREPARATORY WORK ON THE VEHICLE

- Disconnect the battery
- Remove glove compartment
- Remove tank according to the manufacturer's instructions
- Remove wiper arms and wiper pan cover
- Drain coolant into a clean container
- Remove aircon control unit (only for vehicles with air-conditioning with automatic temperature control)
- Dismantle the front bumper
- Dismantle air filter box and intake air pipe
- Dismantle top and bottom engine cowling

REMOVE AIRCON CONTROL FOR VEHICLES WITH AIR-CONDITIONING WITH AUTOMATIC TEMPERATURE CONTROL
(see photos 1 and 2)

Take the upper cover of the shift gate out of the holders.
Undo the two existing screws from the centre console trim moulding.
Take the centre console trim moulding up and out.



Fig. 1
① Holder of the upper shift gate cover
② Undo 2 x fastening screws from the centre console trim moulding

Undo the two fastening screws of the aircon control and release the aircon control out to the back.



Fig. 2
① Aircon control unit fastening screws

3 PRELIMINARY ASSEMBLY

PREPARE HEATER
(see photos 3 to 5)

Mount the water connection socket to the heater as shown.

Remove the duplicate nameplate from the heater and adhere it to the left inner wing panel.

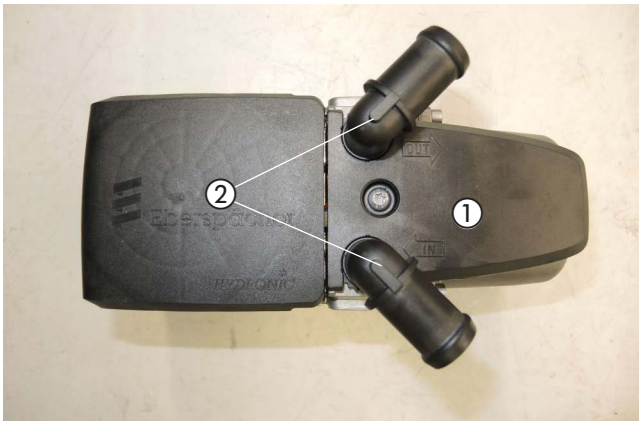

Fig. 3
① Heater
② Mount water connection socket to heater

Installation steps

- Grease the O-ring (5) and insert in the groove at the connection socket.
- Reconnect the battery.
- Fit the connection socket (3 or 4) in the cut-outs of the sensor cover (2). The collar of the connection socket is above the cover.
- Position the connection socket with the gearing in the sensor cover and fix accordingly.
- Fit the sensor cover on the heater with the connection socket pointing forwards.
- Press the connection socket completely into the corresponding holes on the heat exchanger.
- Adjust the direction for the angled connection socket:
  – Raise the sensor cover up to the collar of the connection socket
  – Turn the connection socket in the required direction
  – Push the sensor cover down and readjust the position of the connection socket so that the toothed edges engage again
- Fasten sensor cover with M5 x 18 (1) screw
  (torque $6.5^{+0.5}$ Nm).

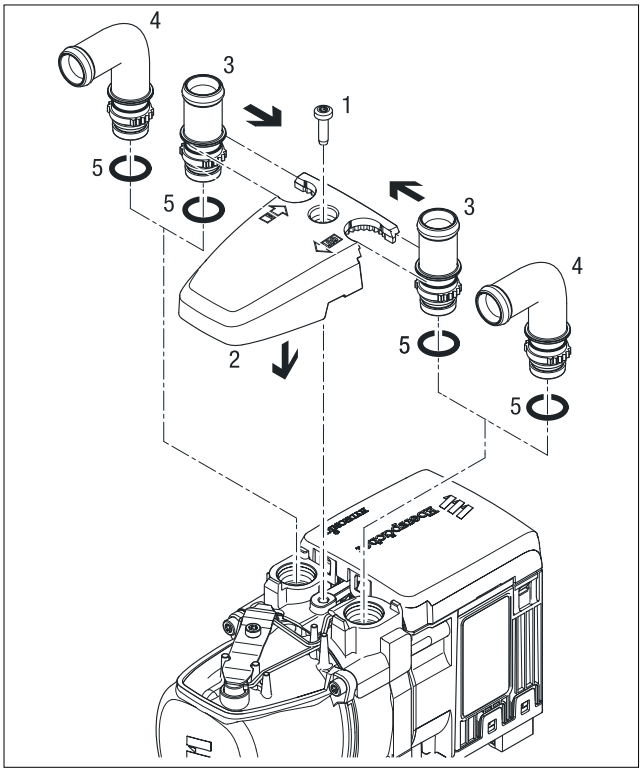

Fig. 4
1 M5 x 18 screw
2 Sensor cover
3 Connection socket, straight
4 Angled connection socket
5 O-ring

3 PRELIMINARY ASSEMBLY

Fit the duplicate nameplate on the B-pillar on the driver's side as shown.



Fig. 5
① Adhere duplicate nameplate

PREPARE EXHAUST SYSTEM
(see photo 6)

Shape the exhaust pipe (length L = 720 mm) as shown.
Shape the exhaust pipe end (length L = 100 mm) as shown.

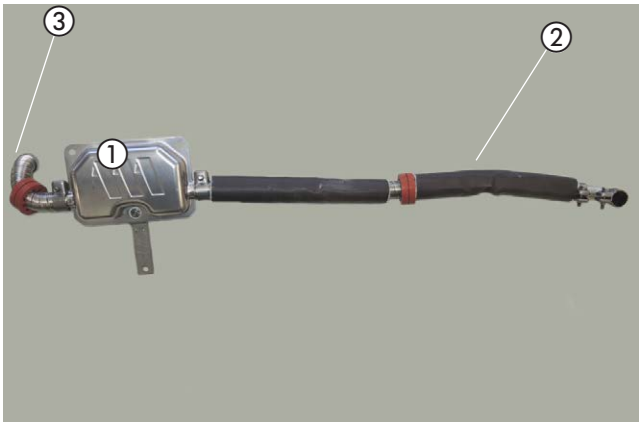

Fig. 6
① Exhaust silencer
② Shape exhaust pipe
③ Shape exhaust pipe end

PREMOUNT WATER PUMP
(see photo 7)

Insert the water pump in water pump holder as shown.

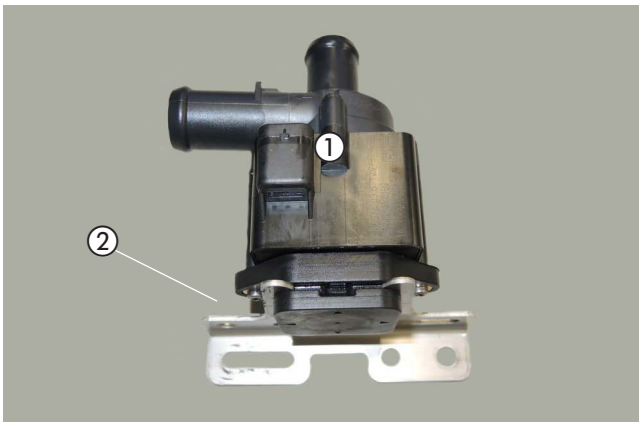

Fig. 7
① Water pump
② Holder, water pump

3 PRELIMINARY ASSEMBLY

PREPARE WATER HOSES
(see photo 8)

Cut the water hoses according to the dimensions shown and prepare or make them ready.

PLEASE NOTE!
The water hoses are connected “inline” to the water circuit , refer to the Technical Description, in the chapter on “Installation” and here the section on “Connection to the Cooling Water Circuit”.

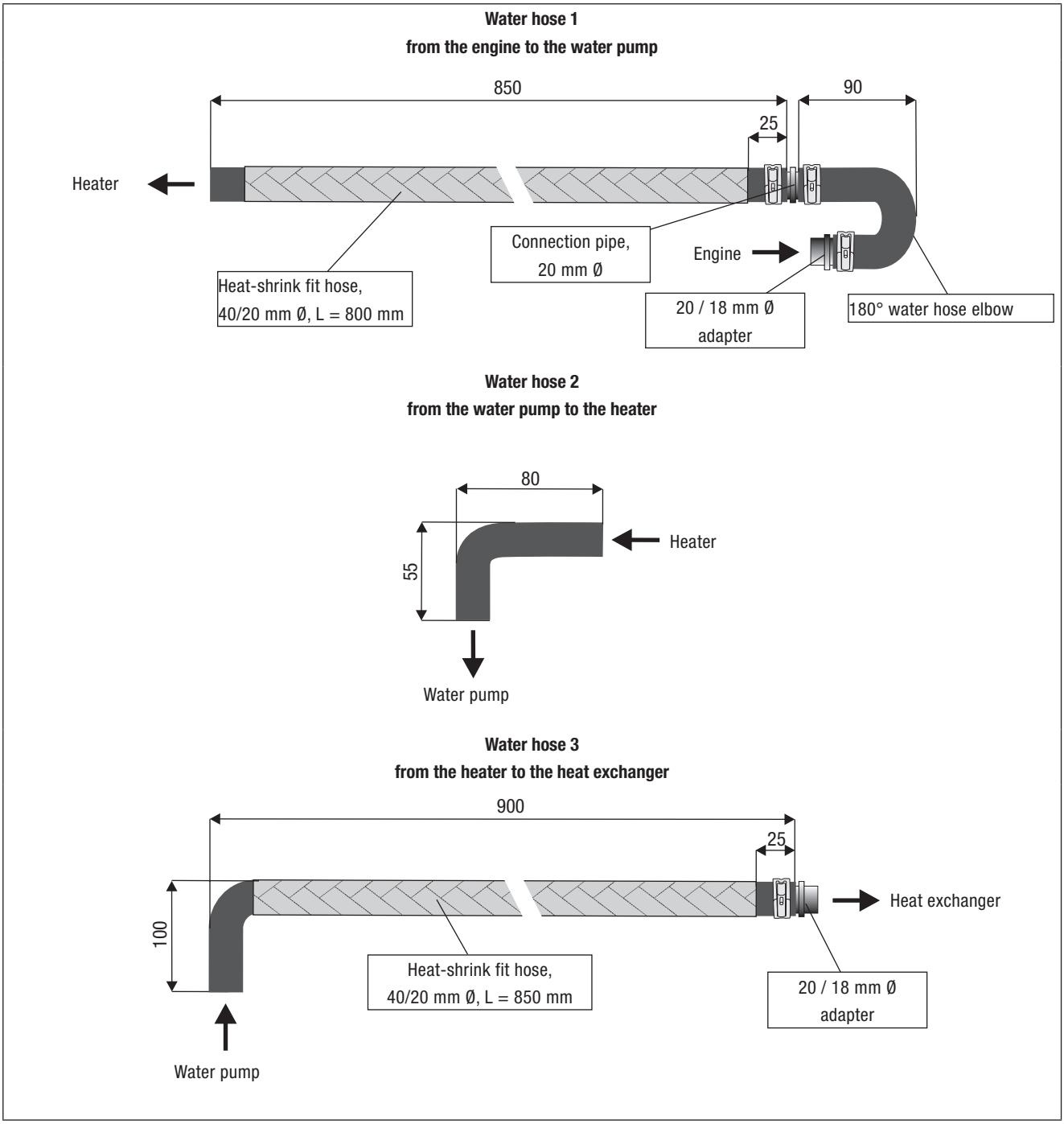

Fig. 8

3 PRELIMINARY ASSEMBLY

PREMOUNT METERING PUMP
(see photo 9)

Insert the metering pump in the rubber holder as shown in the photo.

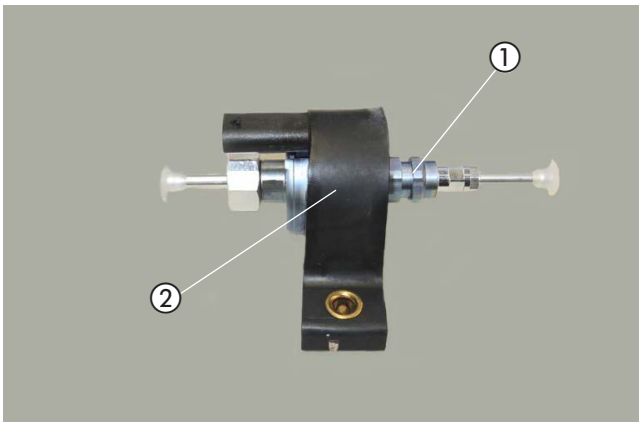

Fig. 9
① Metering pump
② Mount metering pump bracket

PREPARE UNIT BRACKET
(see photo 10)

Keep the heater bracket ready for installation later on.

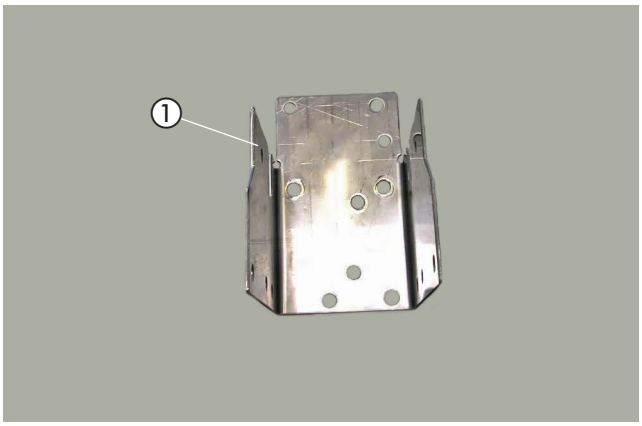

Fig. 10
① Heater bracket

PREPARE FUEL PIPE (SUCTION LINE)
(see photo 11)

Cut approx. 2.0 m off the whole fuel hose pipe for the suction line. The other end length = 6.0 m acts as pressure line.

Use a hot air blower to heat and straighten the fuel pipe over a length of approx. 300 mm.

Push the 7.5/3.5 mm Ø adapter onto the fuel pipe (suction line), position according to dimensions as shown and fasten with the 11 mm Ø clip to the 3.5 mm Ø side.

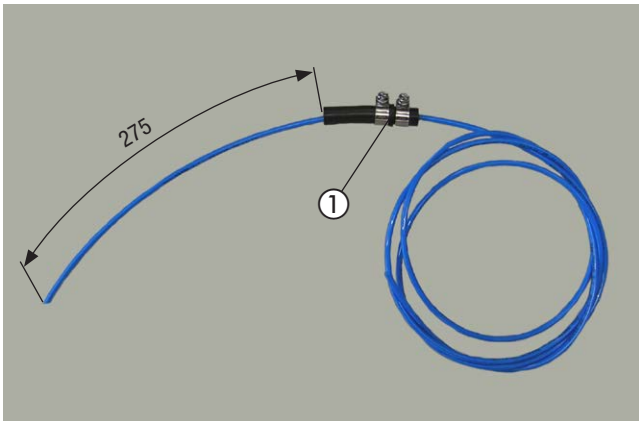

Fig. 11

① Mount fuel pipe (suction line) with 7.5/3.5 mm Ø adapter

3 PRELIMINARY ASSEMBLY

PREPARE FUEL PIPE
(see photo 12)

Fasten the metering pump cable from the main cable loom to the long fuel pipe (pressure line) length = 6.0 m using insulating tape.

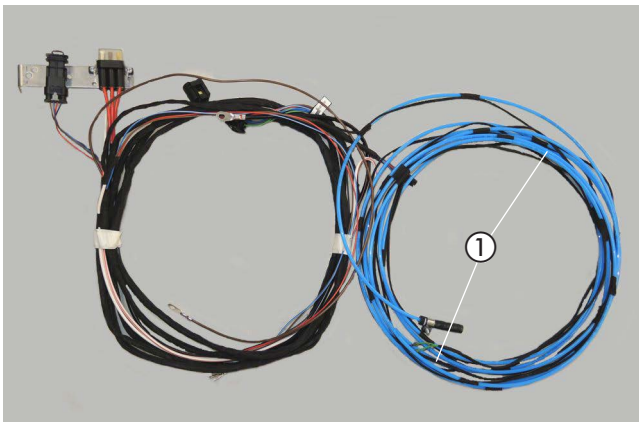

Fig. 12
① Premount fuel pipe (pressure line) length = 6.0 m

PREASSEMBLE FUSE BLOCK
(see photo 13)

Use two M4 x 10 screws to fix the fuse block to the holder for the fuse block.
Insert the 25 A fuse in the still vacant receptacle of the fuse block.

Drill the existing hole in the holder for the fuse block open to 6 mm Ø and slot the connector holder in the hole.

Fasten the diagnostic connector in the connector holder.

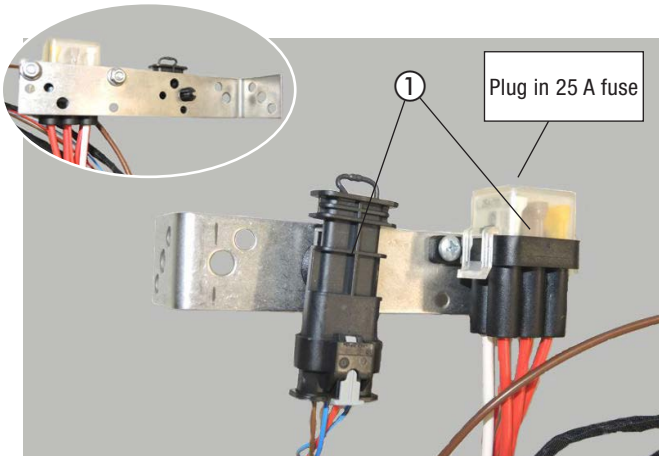

Fig. 13
① Mount fuse and relay block on bracket

PREMOUNT FAN CONTROL BOX “EASYFAN”
(see photo 14)

Use two M4 x 10 screws to install the “EasyFan” fan control box to the holder as shown.
Slot the 8-pin black connector from the “EasyFan” lead harness to the fan control box as shown.

Mount the fan relay block to the holder using an M5 x 10 screw as shown.

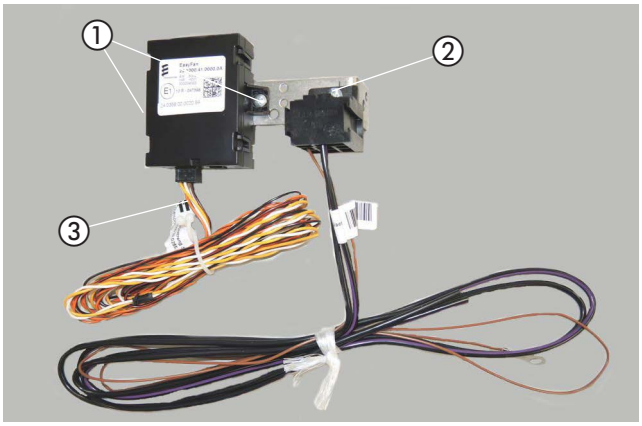

Fig. 14
① Install “EasyFan” fan control box on bracket
② Mount fan relay block
③ 8-pin black connector from the “EasyFan” lead harness

3 PRELIMINARY ASSEMBLY

PREASSEMBLE THE STATIONARY PART OF THE EASYSTART REMOTE/ REMOTE+
(see photos 15 and 16)

Prepare the holder for the stationary part as shown.

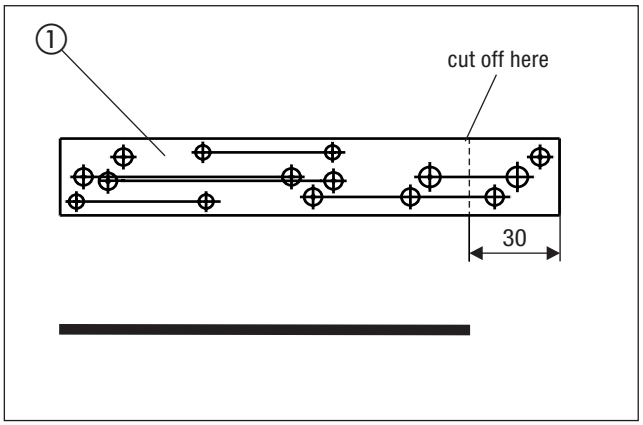

Fig. 15
① Prepare holder for fuse and relay block

Mount the stationary part of the EasyStart Remote/Remote+ to the prepared holder using two M4 x 10 screws as shown.

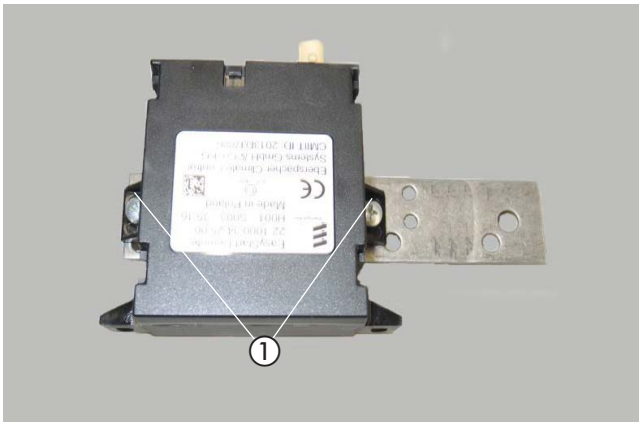

Fig. 16
① Mount EasyStart Remote/Remote+ stationary part to the holder

PREPARE BUMPFER FRONT LEFT AND AFFIX HEAT PROTECTION FOIL
(see photos 17 and 18)

Remove the marked part on the inside of the front left bumper as shown.

Unclip the vehicle's connector.

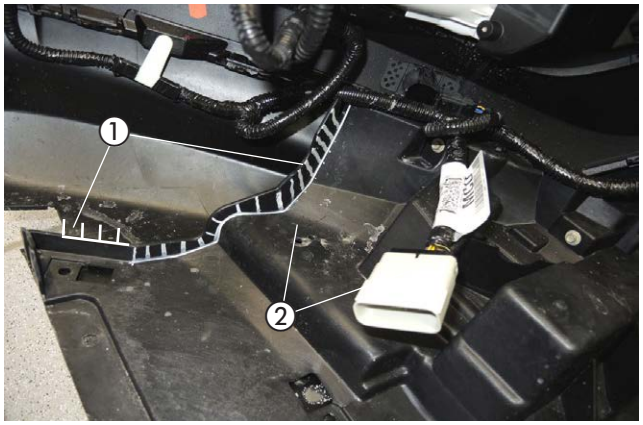

Fig. 17
① Remove marked part
② Unclip connector

3 PRELIMINARY ASSEMBLY

Cut a strip of aluminium foil to size as shown in the figure and stick onto the prepared left-hand side of the bumper.

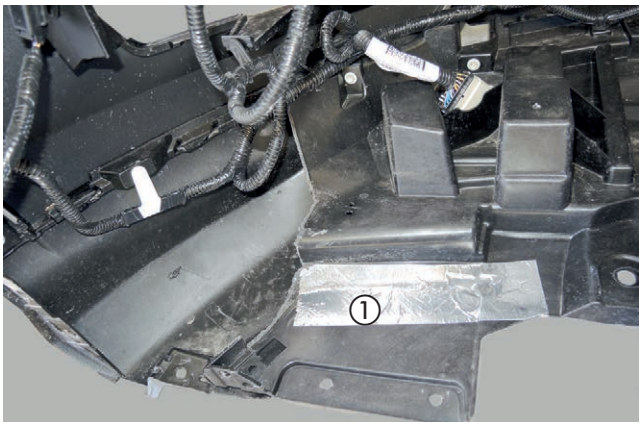

Fig. 18
① Adhere aluminium foil

PREASSEMBLE EXHAUST GROMMET
(see photo 19)

Make the cutout for the exhaust feed-through in the engine underpanelling to match the dimensions shown in the figure.

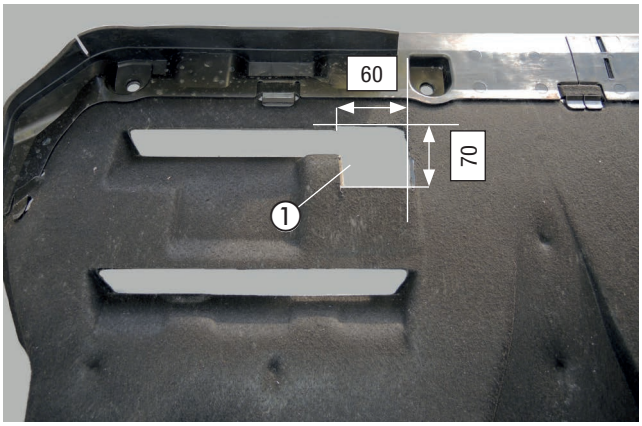

Fig. 19
① Make cut-out

Stick the remaining aluminium foil onto the top of the underside panelling as shown in the figure.

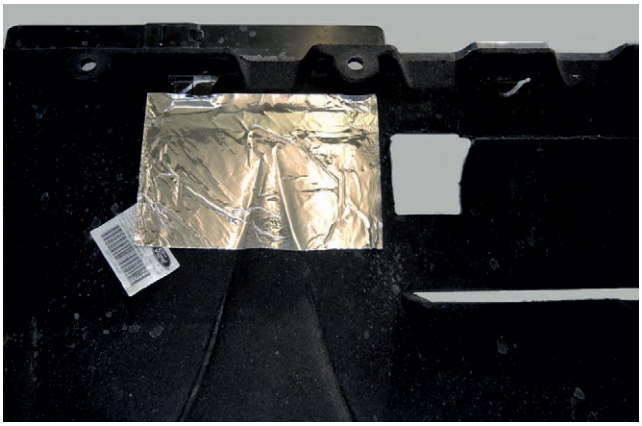

Fig. 20
① Adhere aluminium foil

4 INSTALLATION

PREPARE THE INSTALLATION POSITION
(see photos 20 and 21)

The installation position for the heater is on the outer edge of the left chassis beam.
Release the electrical connection and the vehicle cable loom from the left chassis beam.

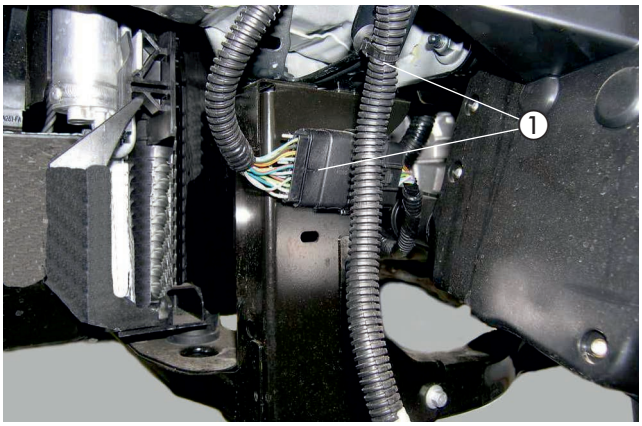

Fig. 21
① Unclip cable harness and reroute

Take the electrical connection behind the chassis beam and fix with cable ties.



Fig. 22
① Reroute connection

MOUNT UNIT BRACKET
(see photos 22 to 25)

Hold the unit bracket flush and horizontally at the left front chassis beam as shown.

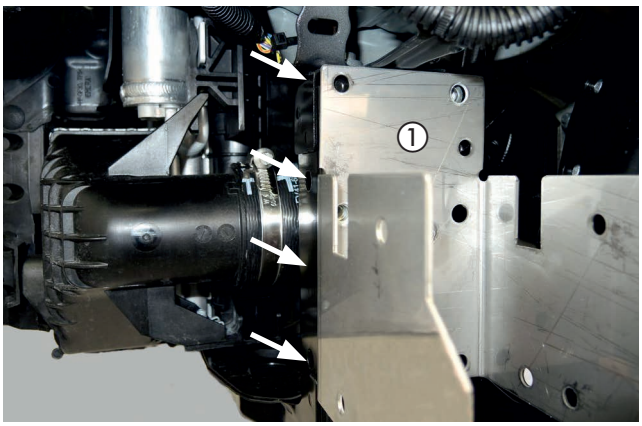

Fig. 23
① Hold unit bracket in position

4 INSTALLATION

Hold the unit bracket flush and horizontally at the chassis beam and mark four fastening points.

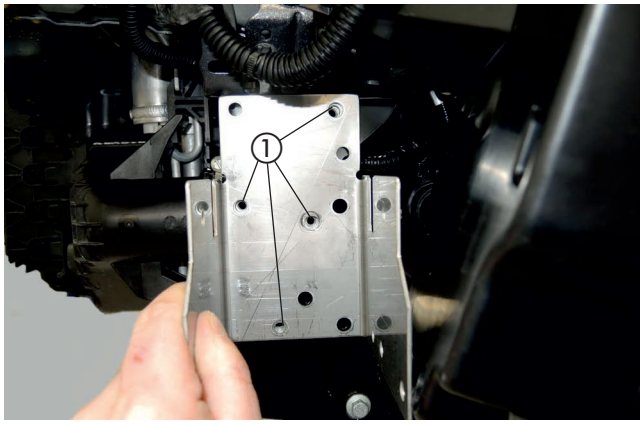

Fig. 24
① Hold unit bracket in position and mark four fastening points

Drill a 9 mm Ø hole at each of the four marked fastening points on the front left chassis beam as shown and insert an M6 blind rivet nut.

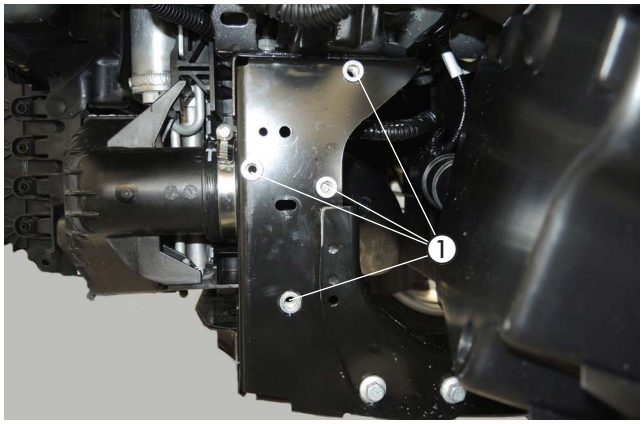

Fig. 25
① Drill four 9 mm Ø holes and insert 4 x M6 blind rivet nuts

Fasten the unit bracket in the already fitted blind rivet nuts using four M6 x 16 screws.

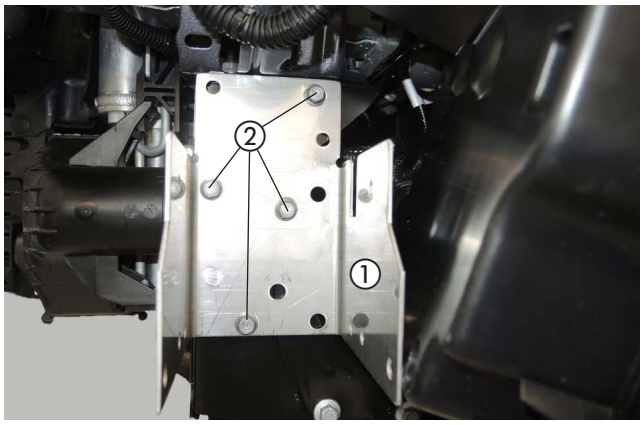

Fig. 26
① Unit bracket
② 4 x M6 x 16 screw

4 INSTALLATION

MOUNT THE HEATER AND ROUTE THE COMBUSTION AIR PIPE
(see photos 26 and 27)

Insert the heater in the unit bracket and screw tight with three M6 x 12 screws as shown.

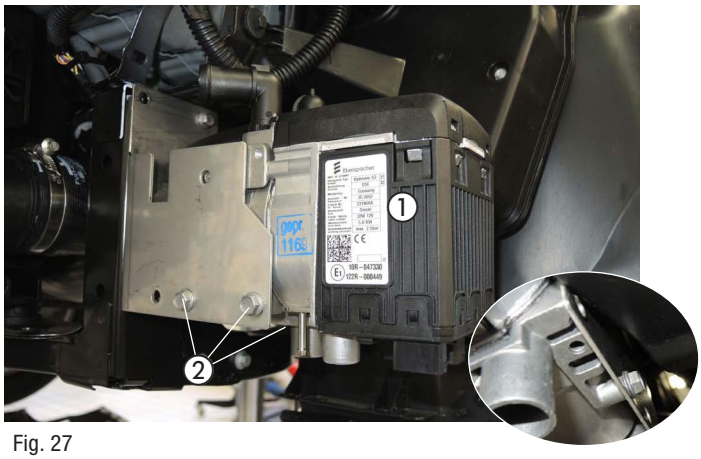

Fig. 27
① Heater
② 3 x M6 x 12 screw

Mount the combustion air bend to the combustion air pipe as shown. Use a 16-25 mm Ø hose clip to connect the combustion air pipe to the heater, and take it upwards in the bend below the left headlight as shown.
Use cable ties to fix the combustion air pipe in suitable places.

CAUTION!
Lay the combustion air pipe so that only clean, dry combustion air can be drawn in through the heater.



Fig. 28
① Connect and lay combustion air pipe

INSTALL EXHAUST SILENCER AND CONNECT
(see photos 28 and 29)

Remove the plastic expansion rivet underneath the front crossbeam as shown, drill the hole open to 9 mm Ø and insert an M6 blind rivet nut.

Secure the two vehicle water hoses to each other behind the vehicle radiator using two rotatable line holders.

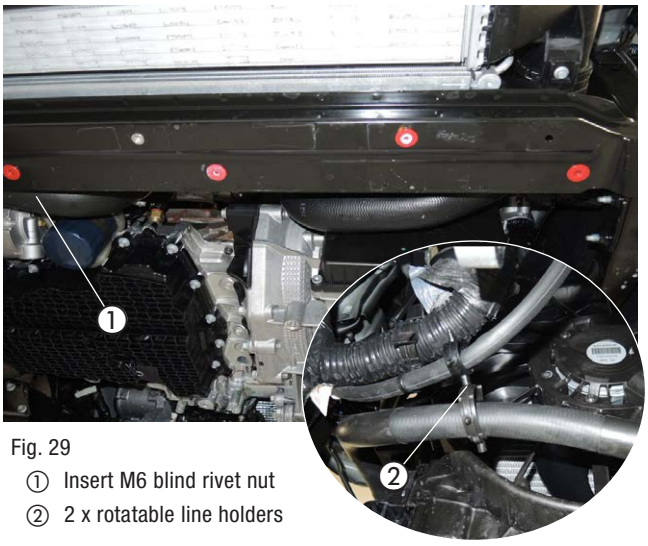

Fig. 29
① Insert M6 blind rivet nut
② 2 x rotatable line holders

4 INSTALLATION

Use the vehicle's own screw to mount the prepared exhaust silencer onto the bottom crossbeam as shown.

Use the clip to connect the exhaust pipe to the exhaust outlet connection of the heater.



Fig. 30
① Mount the exhaust silencer
② Connect the exhaust pipe

⚠ CAUTION!
When laying the exhaust pipes, ensure they are at a sufficient distance from adjacent body components.

INSTALL WATER PUMP
(see photo 30)

Mount the prepared water pump with an M6 x 12 screw in the existing hole on the unit bracket and align as shown.

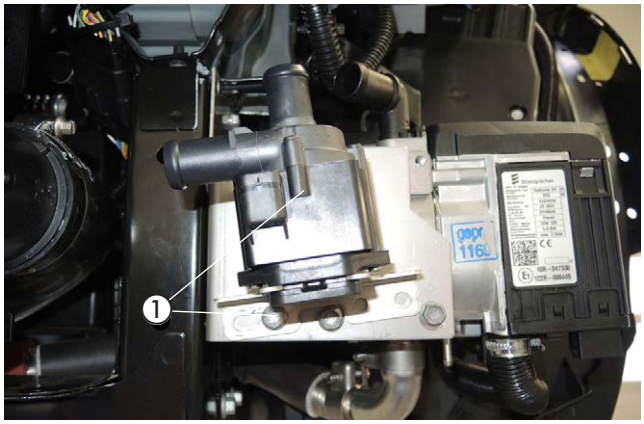

Fig. 31
① Install prepared water pump
② Position rubber spacer
③ Connect water hose 2

WATER FLOW HOSE CUTTING POINT
(see photo 31)

Cut the water flow hose from the heat exchanger to the engine (the right water hose at the heat exchanger) according to the dimensions shown.

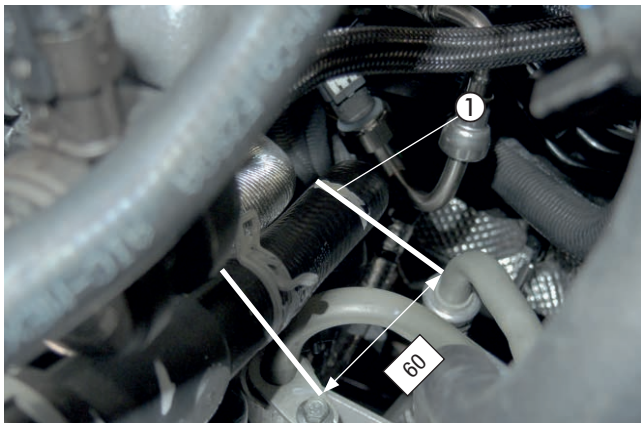

Fig. 32
① Cutting point in the water flow hose

4 INSTALLATION

LAY AND CONNECT WATER HOSES
(see photos 32 to 35)

Connect water hose 1 to the water inlet connection of the heater using a spring band clamp.

Connect water hose 2 to the intake connection of the water pump and to the water outlet connection of the heater with a spring band clamp in each case.

Connect water hose 3 to the discharge end of the water pump using a spring band clamp.

Route water hoses 1 and 3 in the engine compartment to the cutting point.

Route water hoses 1 and 3 along the vehicle water hose on to the cutting point on the water flow hose as shown.

Use cable ties to fasten water hoses 1 and 3 to each other and to the vehicle water hose as shown.



Fig. 33
① Connect water hose 1
② Connect water hose 2
③ Connect water hose 3

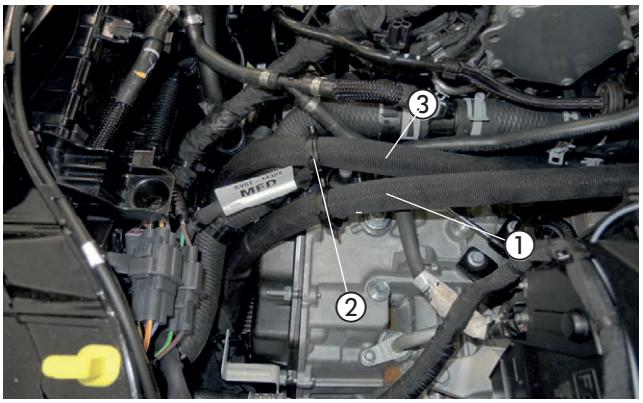

Fig. 34
① Water hose 1
② Line holder, rotatable
③ Water hose 3

Connect water hose 1 with the 180° water hose bend and the 20/18 Ø adapter to the piece of water flow hose from the engine, using a hose clip.

Connect water hose 3 with the 20/18 Ø adapter to the piece of water flow hose to the heat exchanger, using a hose clip.

Fix water hoses 1 and 3 to each other using two rotatable line holders.

CAUTION!
Secure all hose connections with spring band clamps or hose clips. Protect the water hoses against chafing and use cable ties to secure in suitable positions.

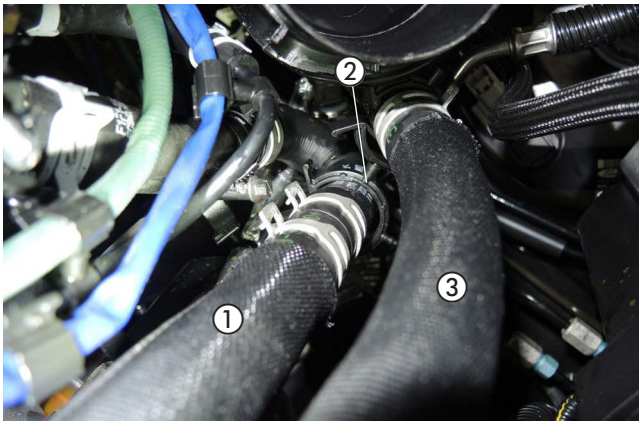

Fig. 35
① Connect water hose 1
② 2 x rotatable line holders
③ Connect water hose 3

4 INSTALLATION

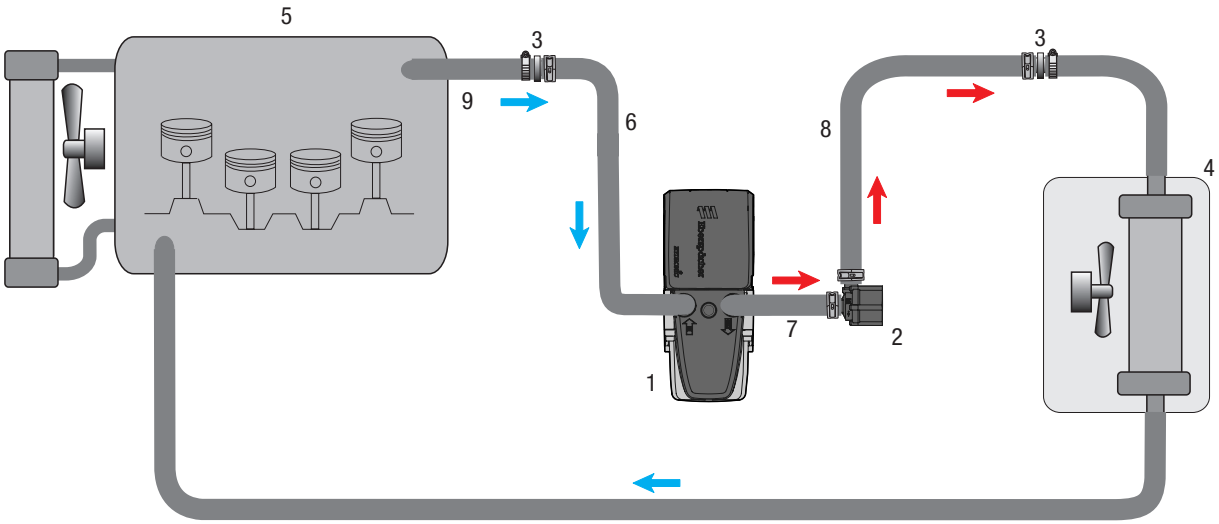

1 - Heater Hydronic S3
2 - Water pump
3 - Adapter 20/18 mm Ø
4 - Vehicle heat exchanger
5 - Engine
6- Water hose 1
7- Water hose 2
8- Water hose 3
9- Vehicle water flow hose
- Spring band clip
- Hose clip, 16 – 25 mm Ø

Fig. 36

4 INSTALLATION

CONNECT TANK
(see photos 36 and 37)

Remove the tank according to the manufacturer's instructions.

Cut approx. 3 mm off the free pipe connection socket of the tank fitting.

⚠ CAUTION!
When opening the connection socket, ensure that no dirt gets into the tank or the supply lines.



Fig. 37
① Connection socket

Pass the fuel pipe (suction line) through the pipe connection sockets into the tank, push the 7.5/3.5 mm Ø adapter onto the pipe connection socket and fix with the 11 mm Ø clamp.

Take the fuel pipe (suction line) to the installation position of the metering pump on the right-hand underside of the vehicle behind the tank.

Refit the cover above the tank fitting.

PLEASE NOTE!
Make sure the tank fitting can move freely.

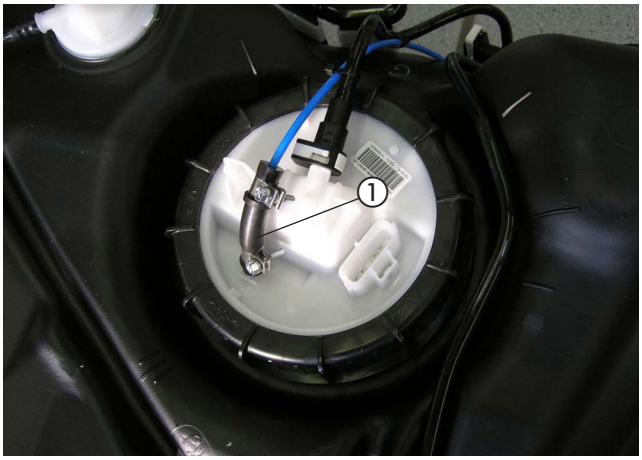

Fig. 38
① Connect fuel pipe (suction line) to pipe connection socket with adapter

CONNECT AND LAY FUEL PIPE
(see photos 38 and 39)

Mount the fuel pipe (pressure line) with the 4.5/3.5 mm adapter to the fuel connection socket of the heater, route it upwards in the bend and on to the right vehicle underbody.



Fig. 39

① Mount fuel pipe (discharge line) with 4.5/3.5 mm Ø adapter

4 INSTALLATION

Route the fuel pipe (pressure line) together with the metering pump cable along the vehicle fuel lines on the right underside of the vehicle to the installation position of the metering pump (on the right behind the fuel tank) and fasten with cable ties.

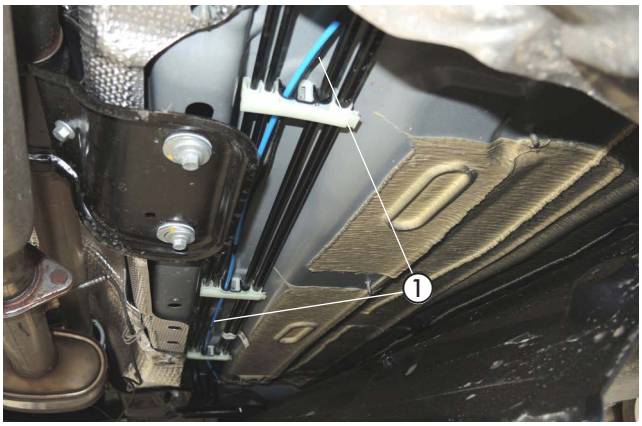

Fig. 40
① Lay fuel pipe (discharge line) and metering pump cable

⚠ CAUTION!
When laying fuel lines, always ensure they are at an adequate distance from hot vehicle and heater parts.

MOUNT THE METERING PUMP
(see photo 40)

Fasten the prepared metering pump to the existing M6 threaded hole underneath the right chassis beam and secure with an M6 x 25 screw and a B6 body washer.
Ensure it is installed with at least a 15° rising gradient on the pressure side.
The intake end of the metering pump points to the front.
Cut the fuel pipe (suction line) from the tank connection to the metering pump to the required length, and connect with 3.5 x 3 mm Ø fuel hose length 50 mm to the metering pump intake connection, using a 9 mm Ø hose clip.
Connect the fuel pipe (pressure line) with 3.5 x 3 mm Ø fuel hose, length 50 mm, to the discharge end of the metering pump using a 9 mm Ø hose clip.

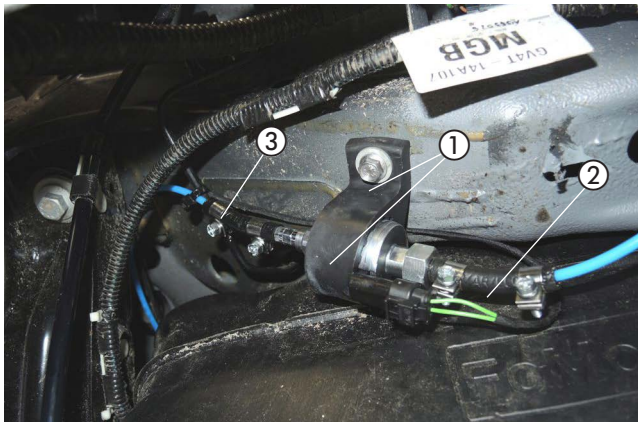

Fig. 41
① Mount the metering pump
② Connect fuel pipe (intake line)
③ Connect fuel pipe (pressure line)

Slot the plug-in contacts of the metering pump cable into the mating connector regardless of polarity.

Connect the connector to the metering pump.

⚠ CAUTION!
Secure all hose connections with hose clips.

4 INSTALLATION

MOUNT FUSE BLOCK
(see photo 41)

Mount the premounted holder with the fuse block to the existing 6.5 mm Ø hole of the left wing plate using an M6 x 12 screw as shown.

Plug in the connector of the main cable harness, the water pump cable loom and the power supply cable loom to the heater.

Route and connect the cable loom to the water pump.

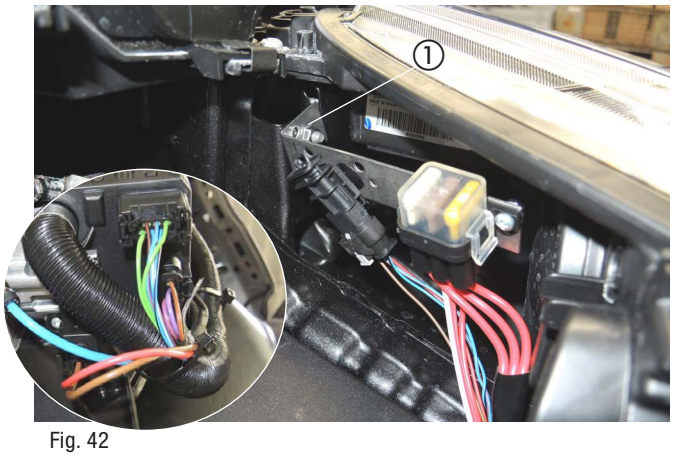

Fig. 42
① Mount fuse block with holder

CABLE LAYING
(see photo 42)

Take the vehicle interior cable loom consisting of:
- 4 mm² ws/rt cable and 0,5 mm² sw/rt cable
- 3-wire control unit cable loom
- 4-pin fan control box cable loom

through the vehicle cable grommet on the right side of the engine partition into the interior of the vehicle.

⚠ CAUTION!
When laying the cable looms, ensure they are at an adequate distance from hot vehicle and heater parts. Use cable ties to fix the cable looms in suitable places.



Fig. 43
① Vehicle cable grommet in the engine partition

FAN CONTROL
for vehicles with air-conditioning with automatic temperature control
(see photos 43 to 47)

Using an M6 x 12 screw, mount the prepared fan control box with the fan relay block to the existing M6 hole on the supporting strut of the instrument panel on the left next to the glove compartment, together with the 1 mm² br earth cable from the fan relay block as shown.
Slot the 4-pin black connector from the “EasyFan” lead harness to the fan control box as shown.

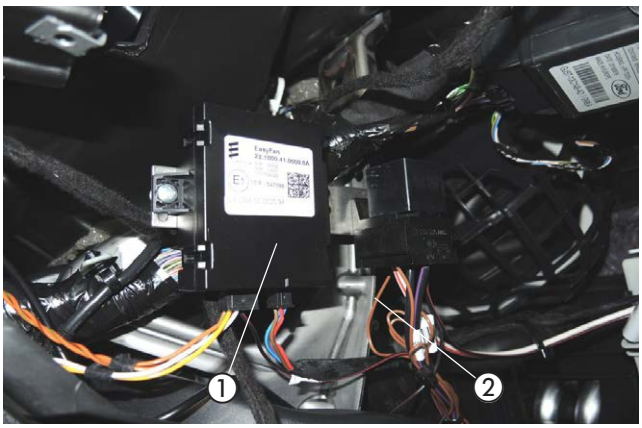

Fig. 44
① Fan control box with fan relay block
② 1 mm² br earth cable from the fan relay block

View of fan relay block from below.

Fit a tab receptacle housing onto the 0.5 mm² sw/rt cable of the main cable harness together with the 0.5 mm² sw/rt cable of the "EasyFan" fan control box and slot into the fan relay block at terminal 1 (86) as shown.

Fit a tab receptacle housing onto the 4 mm² ws/rt cable of the main cable harness and slot into the relay block at terminal 5 (87) as shown.

Insert the fan relay in the relay block.

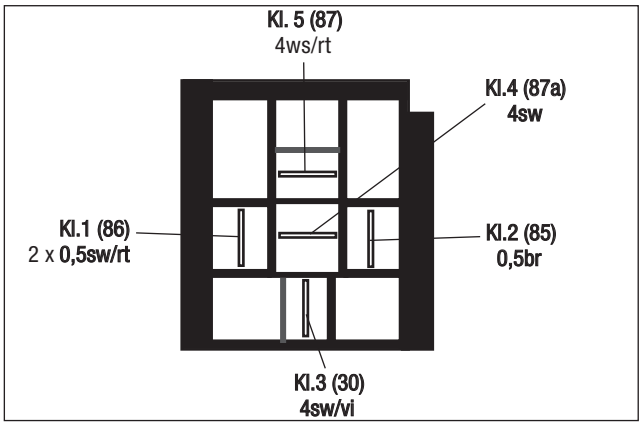

Fig. 45

Take the "fan control" cable loom on to the fan module behind the glove compartment.

At the removed 4-pin grey connector, disconnect the 4 mm² ge/gn cable of the vehicle fan relay and insert the 4 mm² sw and 4 mm² sw/vi cables from the fan relay block using ge butt-type connectors as shown in the circuit diagram.

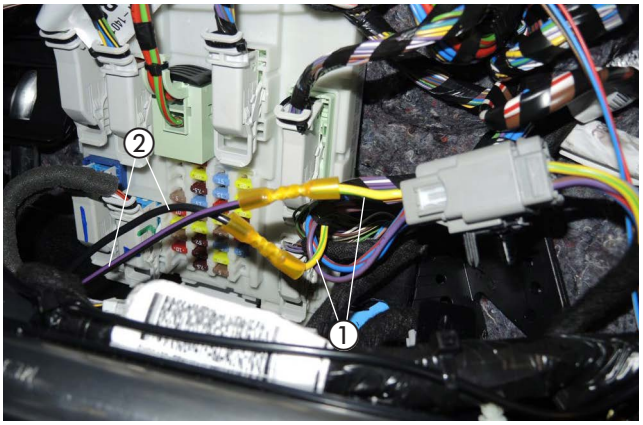

Fig. 46

① Disconnect 4 mm² ge/gn cable

② Connect 4 mm² sw cable and 4 mm² sw/vi cable

Lay the 0.5 mm² ws and 0.5 mm² ge cables together with the 0.5 mm² or/br and 0.5 mm² or/gn cables from the fan control box to the aircon control unit.

At the blue 26-pin connector, disconnect the 0.5 mm² gr/or cable (pin 5, CAN_H) and integrate the 0.5 mm² ge and 0.5 mm² or/gn cables using two red butt-type connectors as shown in the circuit diagram.

At the blue 26-pin connector, disconnect the 0.5 mm² vi/or cable (pin 6 CAN_L) and integrate the 0.5 mm² ws and 0.5 mm² or/br cables using two red butt-type connectors as shown in the circuit diagram.

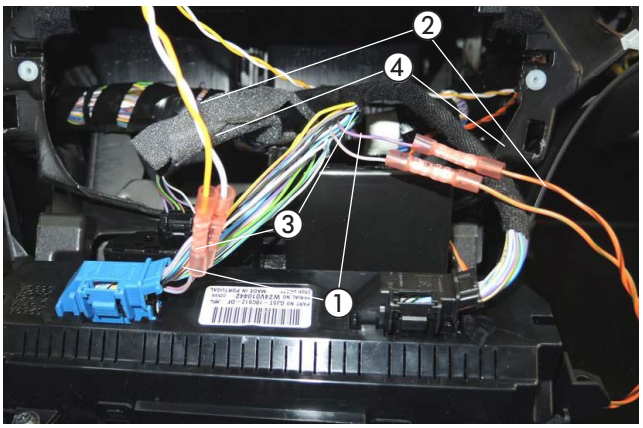

Fig. 47

① Disconnect 0.5 mm² cable gr/or (pin 5)

② Integrate 0.5 mm² ge and 0.5 mm² or/gn cables

③ Disconnect 0.5 mm² cable vi/or (pin 6)

④ Integrate 0.5 mm² ws and 0.5 mm² or/br cables

4 INSTALLATION

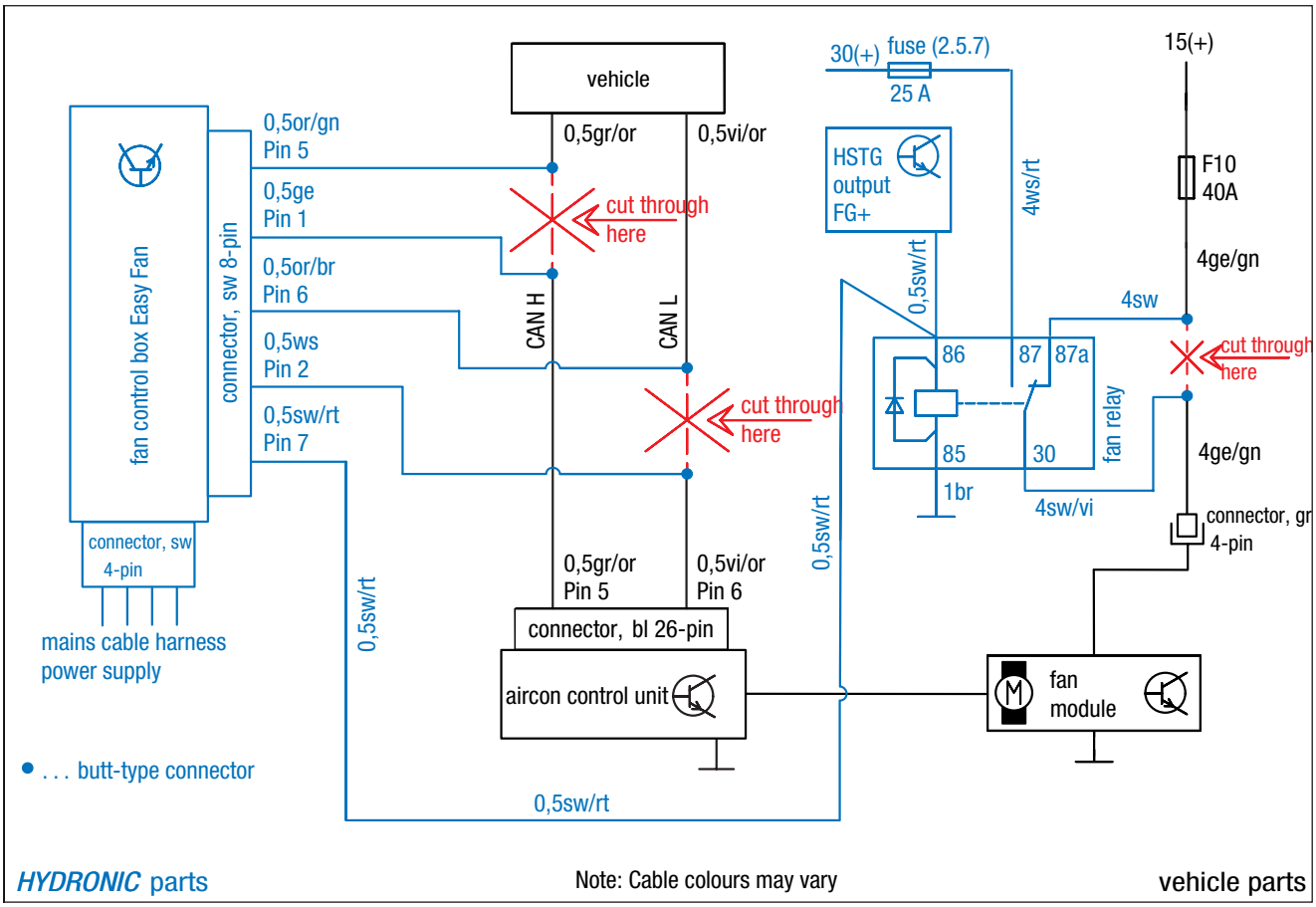

Fig. 48

POWER SUPPLY
(see photo 48)

Route the positive cable 4 mm² rt to the positive terminal of the battery and connect with cable lug A6.

Take the 2.5 mm² br earth cable up to the earthing point of the left chassis beam and connect to the earthing point with the A6 cable lug.



Fig. 49

① Connect positive cable

② Connect earth cable

4 INSTALLATION

INSTALL EASYSTART REMOTE/REMOTE+ RADIO REMOTE CONTROL
(Alternative suggestion - consult with the customer)
(see photos 49 to 51)

The EasyStart Remote/Remote+ is installed according to the Technical Description for the EasyStart Remote/Remote+ Radio Remote Control, refer to the “Installation Instructions” section.

Mount the button of the EasyStart Remote/Remote+ to the centre console on the left next to the cigarette lighter.
To do so, drill a 10 mm Ø hole and insert the button in the hole.



Fig. 50
① Mount the button of the EasyStart Remote/Remote+

Attach the temperature sensor of the EasyStart Remote/Remote+ to the footwell panelling on the passenger side.

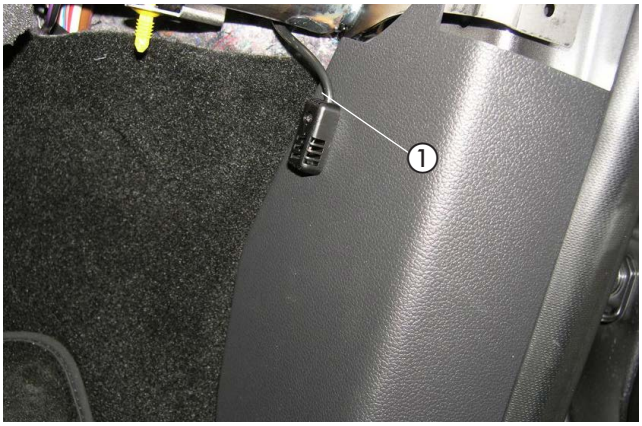

Fig. 51
① Mount temperature sensor

Mount the prepared stationary part of the EasyStart Remote/Remote+ with the holder to the existing tab of the vehicle cable loom fastening on the right behind the glove compartment using an M6 x 12 screw as shown.
Unclip the vehicle cable loom beforehand.
Lay the cables from the installed button and temperature sensor together with the “Control unit” cable loom to the installed position of the stationary part and connect to the stationary part.
Connect the antenna cable of the EasyStart Remote/Remote+ to the stationary part and lay in the rubber door seal on the passenger side.

CAUTION!
Use cable ties to fix any excessive length of antenna cable underneath the instrument panel.

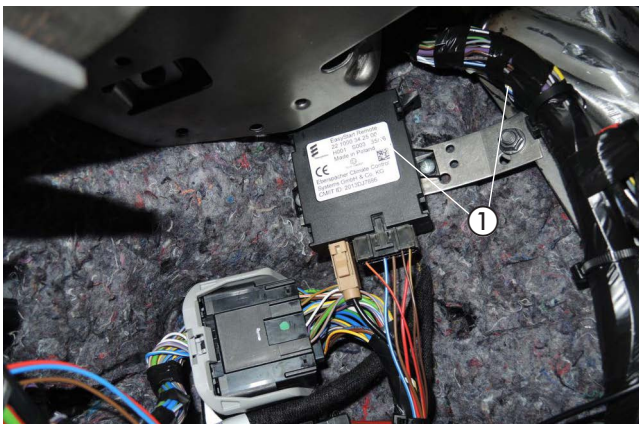

Fig. 52
① Mount the stationary part of the EasyStart Remote/Remote+

5 FOLLOWING INSTALLATION

MOUNT EXHAUST GROMMET
(see photo 52)

Mount the engine cowling and take the exhaust pipe end through the exhaust grommet.

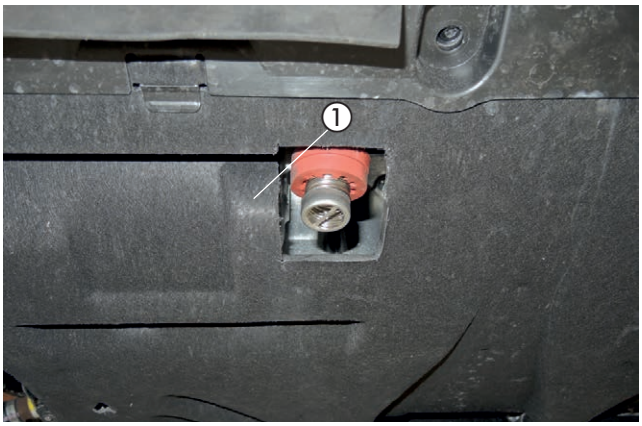

Fig. 53
① Guide the exhaust pipe end through the exhaust grommet

ADHERE THE “REFUEL” LABEL
(see photo 53)

Adhere the “Refuel” label inside the fuel tank flap as shown.



Fig. 54
① Adhere the “Refuel” label

COMPLETE THE VEHICLE

- Install all removed parts in the reverse order.
- Reconnect the battery.
- Check that the hoses, hose clips and pipe clamps as well as all electrical connections are fitted securely.
- Use cable ties to secure all loose cables, lines, etc.
- Restore all the vehicle's programmed settings (radio, window lift, etc.).
- Fill the cooling system, start the engine, vent the cooling system and check for leaks, top up any missing coolant liquid up to the marking (arrow).
- Please also note and follow the vehicle manufacturer's information on filling and venting the cooling system.
- Read and observe all official regulations and safety instructions in the Technical Description.
- Program the control unit and place the operating instructions in the glove compartment.
- Adhere the “Refuel” label in the fuel tank flap.

STARTING UP THE HEATER

- Switch on the heater at the control.
  See Operating Instructions - Control.

CAUTION!
Fill the cooling system only with the coolant liquid specified by the vehicle manufacturer.

PLEASE NOTE!
The last page of the installation recommendation provides the customer with instructions for using the heater.
Take this page out of the installation recommendation and give it to the customer on handing over the vehicle.

6 PARTS OVERVIEW



Fig. 55

Headquarters:
Eberspächer Climate Control Systems GmbH & Co. KG
Eberspächerstraße 24
73730 Esslingen
Hotline: 03976 235 0235
Fax hotline: 01805 262624
info@eberspaecher.com
www.eberspaecher.com

Eberspächer

20 1993 95 3095 01.2018 EN 01.2017
We reserve the right to make changes © Eberspächer Climate Control Systems GmbH & Co. KG