HYDRONIC

Installation instruction

Eberspächer

J. Eberspächer
GmbH & Co. KG
Eberspächerstr. 24
D - 73730 Esslingen

Service-Hotline
01805 - 26 26 26
Telefax
01805 - 26 26 24

www.eberspaecher.com

Upgrading the *HYDRONIC* D 5 W Z to a parking heater in the Ford Tourneo Connect TDCi

from model year 2005
with or without manual air conditioning
- **1.8 l engine capacity / 4-cylinder in-line engine / 66 kW – 90 PS**

This installation instruction is for the vehicle described above and excludes any liability claims whatsoever.
Depending on the version or modification status of the vehicle, there may be differences compared to this installation instruction.
The installer must check this before installation and, if necessary, take into account the differences compared to this installation instruction.

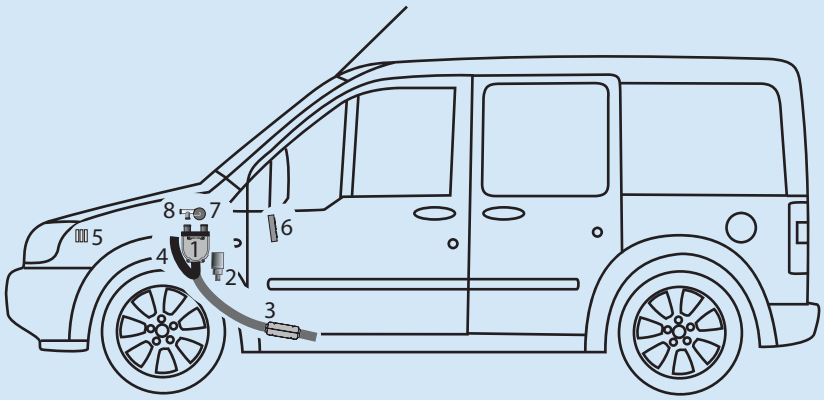

1	*HYDRONIC* D 5 W Z	5	Fuse bracket
2	Water pump	6	Mini-timer
3	Exhaust pipe with exhaust silencer	7	Metering pump
4	Combustion air pipe	8	T-piece

Installation time: approx 4 h

Contents

		Page
1	Introduction	2
2	Water circuit	4
3	Electrics	6
4	After installation	13
5	Parts overview	14
6	Leaflet for the customer	15

24 8188 95 19 07 EN 01.2006 We reserve the right to make changes Printed in Germany © J. Eberspächer GmbH & Co. KG

1 Introduction

Important!
Safety instructions for installation and repair!

Improper installation or repair of Eberspächer heaters can cause a fire or result poisonous exhaust entering the inside of the vehicle.
This can cause serious and even fatal risks.

The heater may only be installed by authorised and trained persons, in accordance with the specifications in the technical documents or repaired by them using original spare parts. Installation and repairs by unauthorised and untrained persons, repairs using non-original spare parts and without the technical documents required for installation and repair are dangerous and are therefore not permitted.

Please note!

Installation according to this installation instruction may only be carried out in connection with the respective unit-related technical description, installation instructions, operating instructions and maintenance instructions.
This document must be carefully read through before / during installation and followed throughout.
Particular attention is to be paid to the safety instructions and the general information.
The relevant rules of sound engineering practice and any information provided by the vehicle manufacturer are to be observed during the installation.
Eberspächer does not accept any liability for defects and damage, which are due to installation by unauthorised and untrained persons.

Accident prevention

General accident prevention regulations and the corresponding workshop and operating safety instructions are to be observed.

Validity – suggested installation

The suggested installation applies to the vehicle with the engine and transmission version listed in the following.

Engine and transmission version		
Engine capacity	kW / PS	Transmission
1,8 l	66 / 90	5S

5S = 5-speed manual gearbox

Please note!

The installation instruction does not apply to right-hand drive vehicles.

Vehicle types, engine types and options not included in this installation instruction have not been tested.
However, installation according to this installation instruction may be possible.

1 Introduction

Parts required for the installation

Quantity / Designation		Order no.
1	Upgrade kit	24 8188 00 00 00

Special tools required

- Torque wrench (5....50 Nm)
- Anti-corrosion agent
- Ejection tool for plug-in contacts
- Electric drill

Tightening torques

If no tightening torques are specified, tighten the screwed connections (hexagon screw and hexagon nut) according to the following table.

Screwed connections	Tightening torques
M6	10 Nm
M8	20 Nm
M10	45 Nm

All screwed connections, except the heater itself (M6 x 97), are fitted with a wave washer or a spring lock washer.

Preparing the vehicle

- Disconnect the battery
- Dismantle the trim panel under the glove compartment
- Dismantle the air filer housing
- Release the pressure in the cooling system
- Drain off coolant

2 Water circuit

Prepare water hose
(See sketch 1)

Cut the water hoses to size according to the dimensions in the sketch and preassemble with Ø 20 – 32 mm hose clip.

Please note!

The water hoses are connected to the water circuit “inline”, see Technical Description, “Installation” chapter, section: “Connection to the cooling water circuit”.

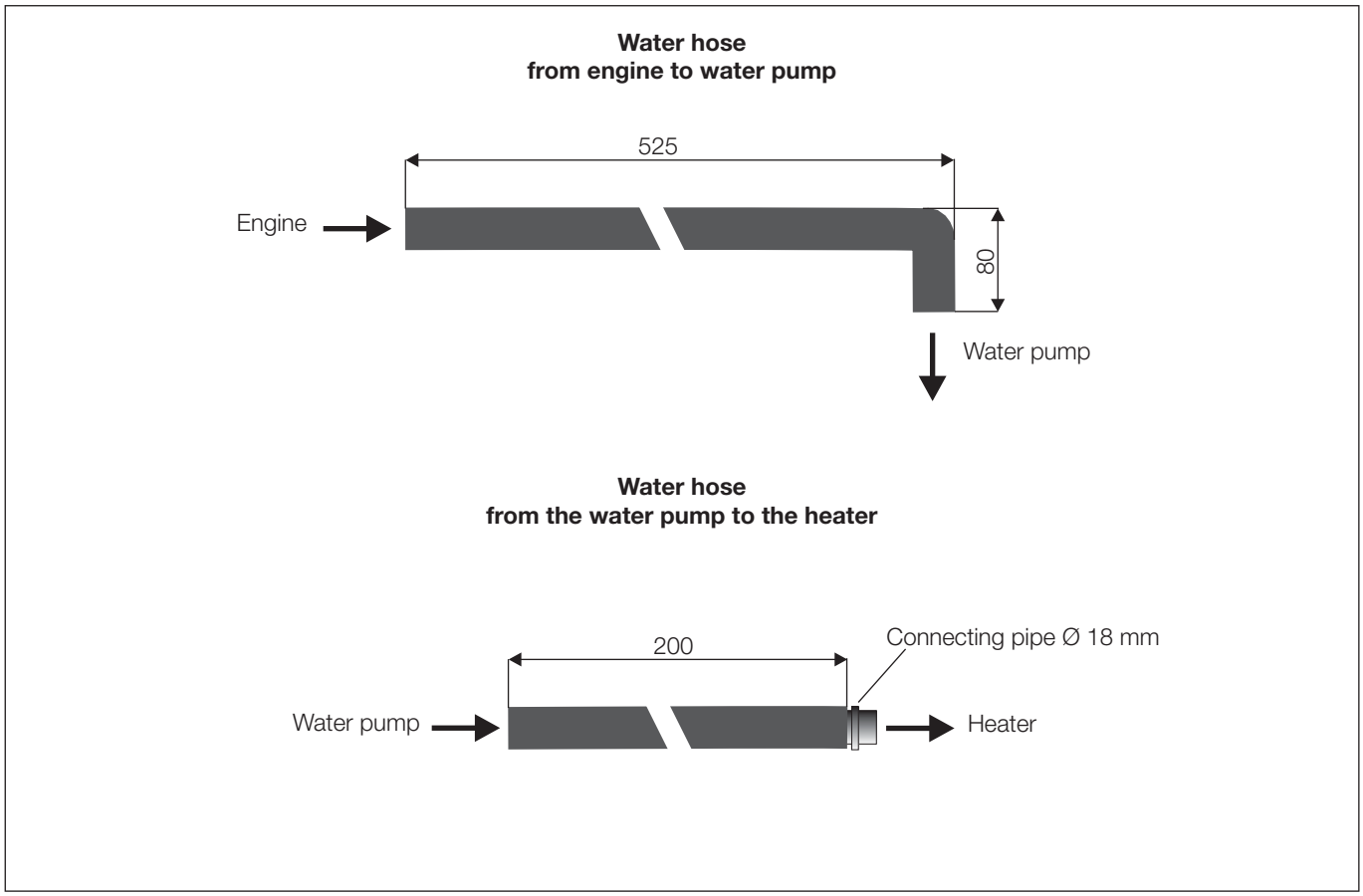

Sketch 1

Install the water pump
(see Figure 1)

Insert the water pump in the rubber holder and fit to the air filter housing bracket using M6 x 30 screw, M6 nut and body washer B6.4 in the existing Ø 7 mm drill hole.
Ensure the discharge connection is facing right and the suction connection faces downward.



Figure 1

① Water pump installed

2 Water circuit

Lay and connect water hoses
(see Figures 2 to 4)

Pull off the water hose from the engine to the heater at the engine's outlet connections and rotate through 90° to the left in the direction of the water pump.

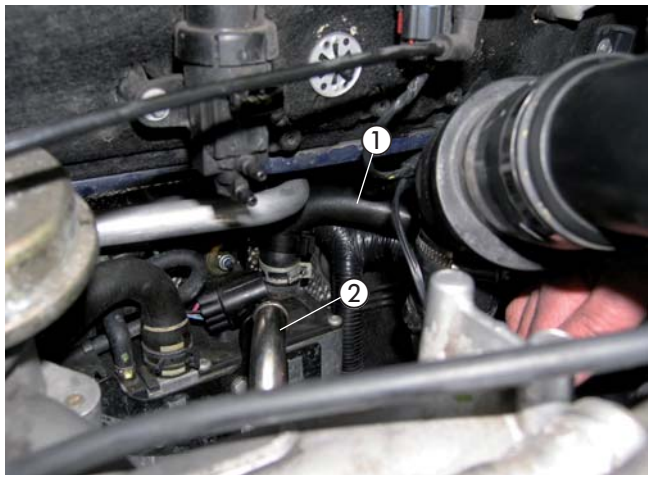

Figure 2

① Water hose from engine to heater
② Water connections on the engine

Connect the water hose from the engine to the water pump with the 90°-elbow bend at the suction connection of the water pump. Lay the water hose from the engine to the water pump in the bend to the water connection on the engine and connect.



Figure 3

① Water hose from engine to water pump

Connect the water hose from the water pump to the heater at the discharge connection of the water pump and at the 90° rotated water hose, with Ø 18 mm connection pipe.

Please note!

Secure all hose connections with hose clips. Protect the water hoses against chafing and use cable ties to secure them at suitable locations.

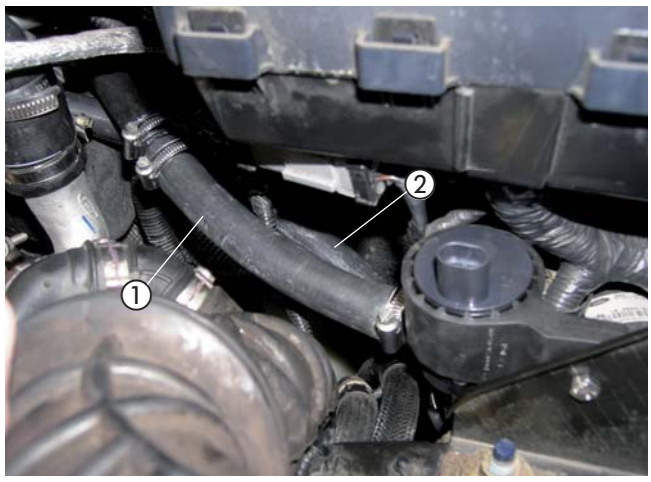

Figure 4

① Water hose from the water pump to the heater
② Water hose from engine to water pump

3 Electrics

Mounting the control box
(see Figures 5 and 6)

Make a Ø 7 mm drill hole as shown in the photo to fix the control box to the radiator cross member.



Figure 5

① Ø 7 mm drill hole made

Please note!

Treat all drill holes with anti-corrosive agent.

Fix the control box to the bracket using M5 x 10 screws and together with M6 x 12 screw and M6 nut to fix at the prepared Ø 7 mm drill hole.



Figure 6

① Control box installed with bracket

Install fuse holder
(see Figure 7)

To fix the fuse holder, make two Ø 2.5 mm drill holes in the radiator cross member to the left above the headlamp.
To this end, place the fuse holder against it and mark on the drill hole positions.
Fix the fuse holder using two 3.9 x 13 tapping screws.
Lay the 2.5 mm² rt/ws cable from the control box to the fuse holder, cut to the required length, crimp the plug-in contact with the seal and insert in the fuse holder.

Cable colour red / white, 2.5 mm² ..... = 25 A

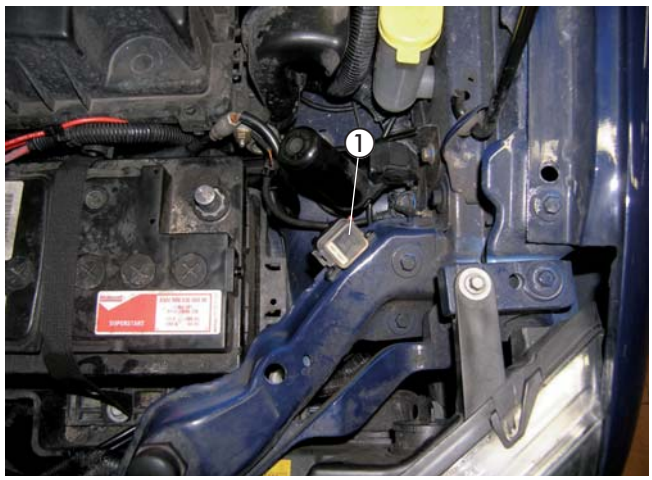

Figure 7

① Fuse holder installed

Lay the cable looms
(see Figures 8 and 9)

Disconnect the 8-pin connector from the heater's cable loom and from the vehicle's cable loom.
Lay the adapter cable loom from the control box to the disconnected 8-pin connector and connect.



Figure 8

① 8-pin connector

Lay the "control unit, blower control and water pump" cable looms along the vehicle's own cable loom.
Connect the "water pump" cable loom to the water pump.
Feed the "control unit and blower control" cable looms through the vehicle's cable grommet in the engine partition to the right next to the brake servo into the inside of the vehicle.

Please note!

When laying the cable looms, ensure they are an adequate distance from hot vehicle and heater parts.
Fix the cable looms at suitable positions using cable ties.



Figure 9

① Cable looms laid through existing cable grommet

Power supply
(see Figure 10)

The power supply with positive takes place directly at the positive terminal post of the battery.
Insert the plug-in contact of the positive cable in the fuse holder.
Feed the positive cable up to the terminal and connect.
Fit the fuse and fuse box cover.



Figure 10

① Power supply positive

Blower control
with or without manual air conditioning
(see Figure 11 and Sketch 2)

Continue laying the “blower control” cable loom to the right-hand side in the passenger footwell behind the glove compartment to the blower motor.
The blower power supply is provided at the 2-pin black connector.
To this end, disconnect the 4 mm² gn/or cable and use the plug-in connectors to connect the 2.5 mm² sw cable and 2.5 mm² sw/vi cable according to the circuit diagram.
Tie back the 0.5 mm² sw/rt cable, it is not required.



Figure 11

① 4 mm² gn/or cable disconnected
② 2.5 mm² sw and 2.5 mm² sw/vi cable connected

Circuit diagram
***HYDRONIC* D 5 W Z upgrade to parking heater with „mini-timer“ control.**

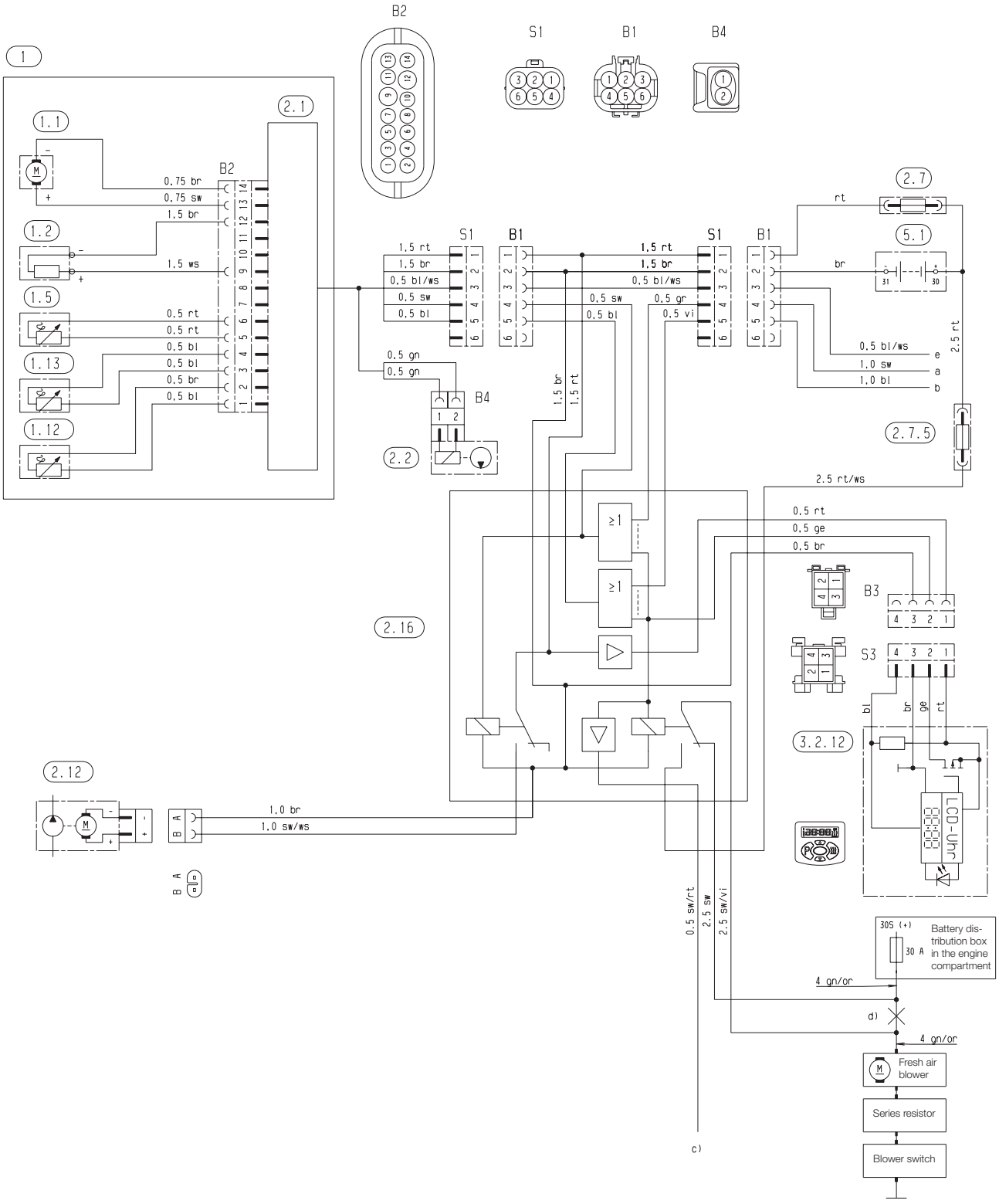

3 Electrics

Key

1	*HYDRONIC* D 5 W Z
1.1	Burner motor
1.2	Glow plug
1.5	Overheating sensor
1.12	Flame sensor
1.13	Temperature sensor
2.1	Control box
2.2	Metering pump
2.7	Main fuse 20A
2.7.5	Fuse, vehicle blower 25A
2.12	Water pump
2.16	Control box, upgrade – Ford Tourneo Connect
3.2.12	Mini-timer
5.1	Battery
a)	+15 or temperature switch
b)	D + generator
c)	Automatic climate control system control
d)	Disconnect cable
e)	Connection, diagnosis

Insulate unused cable ends.

Connectors and bush housings are shown from the cable inlet side.

rt	red
bl	blue
ws	white
sw	black
gn	green
gr	grey
ge	yellow
vi	violet
or	orange

Install the mini-timer
(see Figure 12)

The mini-timer is installed according to the mini-timer installation instructions, see section: “installing and connection the mini-timer”.
Install the mini-timer on the trim panel on the right next to the steering wheel.
To do this, glue on the template and the installation location.
Make the Ø 2.5 mm fixing drill hole and the Ø 7.5 mm drill hole for the cable penetration.
Place the foam underlay onto the mini-timer, fix with the 2.9 x 25 mm tappet screw and fit the cap.
Insulate and tie back the 0.5 mm² bl/ws cable from the “control unit” cable loom.
Attach the connector housing S1 to the “mini-timer” cable loom.
Cut the cable to length at the “control unit” cable loom, crimp the push-on sleeves, attach the bush housing B1 and connect with the connector housing S1.
Connect the gr/sw cable to terminal 58 parking light.

Please note!

Do not specify the mini-timer installation location until you have consulted the customer and discussed the location with them.



Figure 12

① Mini-timer installed

4 After installation

Finish off vehicle

- Install all the dismantled parts in the reverse order.
- Connect up the battery.
- Check the hoses, hose and pipe clips and all electrical connections for secure fit.
- Secure all loose cables with cable ties.
- Set the timer.
- Fill the cooling system, start the engine, vent the cooling system and check for leaks, top up the coolant liquid up to the mark (arrow).
- Please also follow the vehicle manufacturer's instructions of filling and venting the cooling system.
- Observe the official regulations and safety instructions in the technical description.
- Program the control and place the operating instructions together with the leaflet for the customer in the glove compartment.

Please note!

Only fill the cooling system with the coolant liquid specified by the vehicle manufacturer.

Starting up the heater

- Switch on the heater at the control.
  See operating instructions – control.

5 Parts overview

Item	Name	Quantity	Order number
1	Upgrade kit including:	1	24 8188 00 00 00
	Control box bracket	1	
	Water hose Ø 18 mm	1	
	Hose clip Ø 20-32 mm	5	
	Connection pipe Ø 18 mm	1	
	Water pump bracket	1	
	Water pump	1	
	Hexagon screw M6 x 12	1	
	Fillister-head screw M5 x 10	2	
	Fillister-head screw M4 x 10	2	
	Hexagonal nut M6	1	
	Hexagon nut M5	2	
	Hexagon nut M4	2	
	Washer B6.4	1	
	Spring lock washer B6	1	
	Spring lock washer B5	2	
	Spring lock washer B4	2	
	Self-tapping screw B3.9 x 13	2	
	Fuse holder housing	1	
	Fuse holder cover	1	
	Contact	1	
	Control box	1	
	Individual seal	1	
	Positive cable 2.5 mm^2	1	
	Flat connector	2	
	Push-on sleeve	2	
	Flat connector housing	2	
	Push on sleeve housing	2	
	Dummy plug	4	
	Mini-timer	1	
	Fuse 25A	1	



Item 1 Upgrade kit 1 kit

6 Important information for the customer

Before switching on
(see Figure 1)

- Before switching on or pre-programming the heating mode, set the vehicle's temperature control ① to „hot".
- Set the blower switch ② to level 1.
- Set the controller for the air system ③ to defroster. Maximum air flow at the front windscreen.



Figure 1

① Temperature control
② Blower switch
③ Air system control