HYDRONIC

Installation Recommendations

Eberspächer

J. Eberspächer
GmbH & Co. KG
Eberspächerstr. 24
D - 73730 Esslingen

Service Hotline
+49 (0)1805 - 26 26 26
Facsimile
+49 (0)1805 - 26 26 24

New vehicle-specific installation kit + heater

Hydronic B 4 W SC in Mazda 3 (ACY)

from 2009 model
1.6 l cubic capacity / 4 cylinder in-line engine / 77 kW - 105 HP
- with manual gearbox
- with fog lamps
- with manual or automatic AirCon

This installation recommendation is valid for the vehicle described above and is exempt from any liability claims whatsoever.
Depending on the version or modification status of the vehicle, differences can result between the vehicle and this installation recommendation.
The installer must check this before installation and, if necessary, take into account the differences compared to this installation recommendation.

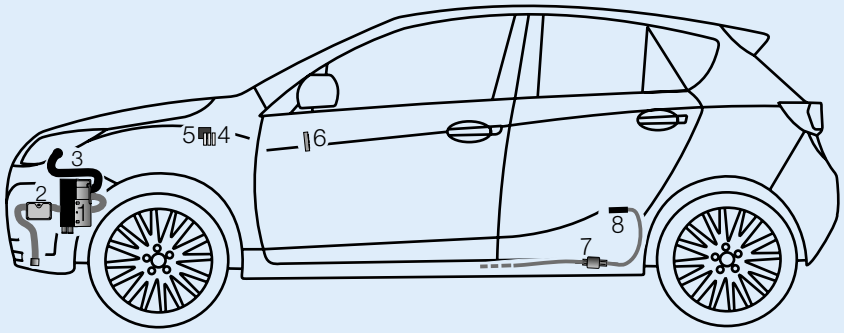

1	Hydronic	5	Fan relay
2	Exhaust pipe with exhaust silencer	6	EasyStart T
3	Combustion air tube	7	Metering pump
4	Fuse holder	8	Adapter 7.5/3.5 mm Ø

Installation location
The Hydronic is fastened to the inner side of the left chassis beam.
The exhaust connection points to the rear and the water connection points downwards.

Parts needed for installation:
(1) Vehicle-specific installation kit
(2) B 4 W SC
(3) EasyStart T control or as chosen

Installation time: approx. 6 h

Please note!

Please deliver the vehicle with an empty tank!

Contents

		Page
1	Introduction	2
2	Installation - Heater	4
3	Exhaust and combustion air system	6
4	Water circuit	7
5	Fuel supply	10
6	Electrics	12
7	After installation	17
8	Parts overview	18
9	Leaflet for the customer	19

20 1824 95 23 08 10.2009 We reserve the right to make changes Printed in Germany © J. Eberspächer GmbH & Co. KG

1 Introduction

Important!
Safety instructions for installation and repair!

Improper installation or repair of Eberspächer heaters can cause a fire or result in poisonous exhaust fumes entering the vehicle interior.
This can pose a serious risk to life and limb.

The heater may only be installed according to the specifications in the technical documents and repaired using original spare parts by authorised and trained persons. Installation and repairs by unauthorised and untrained persons, repairs using non-original spare parts and without the technical documents required for installation and repair are dangerous and therefore are not permitted.

Please note!

Installation according to this installation recommendation may only be carried out in conjunction with the respective unit type-related technical description, installation instructions, operating instructions and maintenance instructions.
This document must be carefully read through before / during installation and followed throughout.
Particular attention is to be paid to the safety instructions and the general information.
The relevant rules of sound engineering practice and any information provided by the vehicle manufacturer are to be heeded during the installation.
Eberspächer does not accept any liability for defects and damage due to installation by unauthorised and untrained persons.

Accident prevention

General accident prevention regulations / health and safety regulations and the corresponding workshop, company and operating safety instructions are to be observed.

Installation recommendation validity

The installation recommendation is valid for the vehicle with the engine and gearbox options listed in the following.

Engine and gearbox options		
Cubic capacity	kW / HP	Gearbox
1.6 l	77 / 105	5S

5S = 5-gear manual gearbox

Please note!

The installation recommendation is not valid for right-hand drive vehicles.

Vehicle types, engine types and feature options not listed in this installation recommendation have not been tested. Installation according to this installation recommendation can still be possible.

1 Introduction

Parts required for installation

Quantity/Designation	Order No.
(1) Vehicle-specific installation kit	
1 Vehicle-specific installation kit *	24 8453 00 00 00
(2) Heater	
1 Hydronic B 4 W SC	20 1824 05 00 00
(3) EasyStart control unit as chosen	
1 EasyStart T	22 1000 32 88 00
1 Console	22 1000 51 32 00
or	
1 EasyStart R+ radio remote control	22 1000 32 80 00
or	
1 EasyStart R radio remote control	22 1000 32 85 00

**** Important:*** *The new vehicle-specific installation kit contains* ***all*** *parts needed for installation.*

Special tools required

- Torque wrench (5....50 Nm)
- Anti-corrosion agent
- Crimping tool
- Step drill
- Pliers for spring band clamps
- Spanner for union nut of the tank fitting

Tightening torques

If no tightening torques are specified, tighten the screw connections (hexagon screw and hexagon nut) according to the following table.

Screwed connections	Tightening torques
M6	10 Nm
M8	20 Nm
M10	45 Nm

Preparation on the vehicle

- Remove battery and battery holder
- Remove left cover of the instrument panel
- Remove glove compartment
- Remove lower cowling
- Remove fuel tank
- Depressurise the cooling system
- Drain coolant into a clean container

2 Installation - Heater

Prepare the installation position
(see photos 1 and 2)

On the left side of the vehicle, unscrew the horn from the holder and refasten as shown in the photo.



Photo 1

① Horn refastened to the holder

The two existing M6 threaded holes on the inside of the left chassis beam act as fastening points for the unit holder.

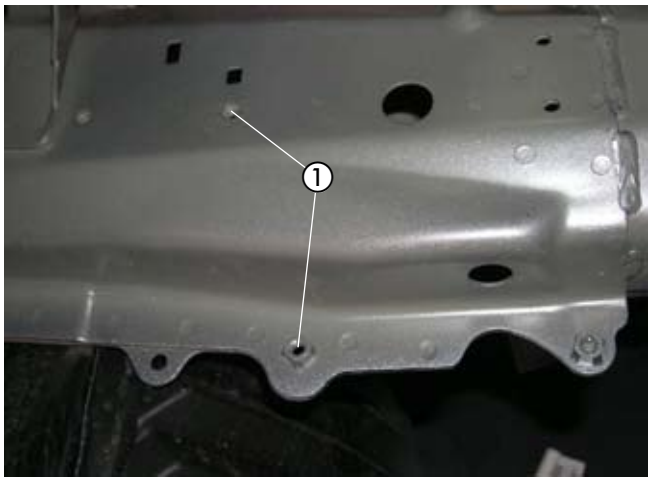

Photo 2

① Two existing M6 threaded holes in the left chassis beam

Prepare and install unit holder
(see photos 3 and 4)

Fit the holder (Z-bracket) 20 1533 88 00 07 to the unit holder with an M6 x 16 screw and align as shown in the photo.

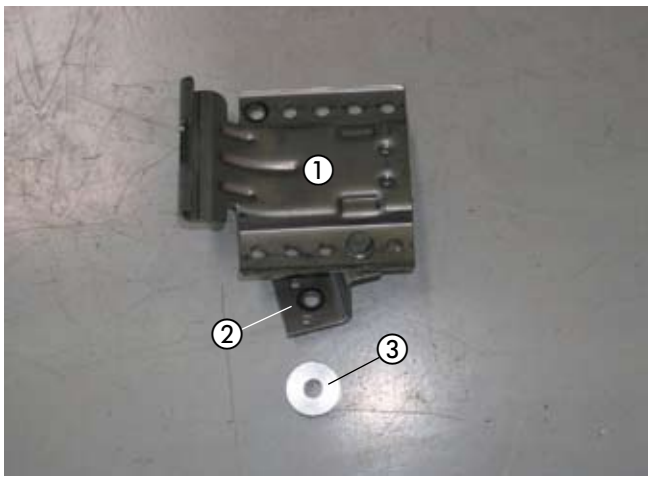

Photo 3

① Unit holder 22 1000 51 36 00
② Holder (Z-bracket) 20 1533 88 00 07, mounted
③ Distance sleeve 20 1856 05 00 05

2 Installation - Heater

Using an M6 x 16 screw, fasten the unit holder to the upper M6 threaded hole.

Using an M6 x 25 screw, fasten the holder (Z-bracket) 20 1533 88 00 07 and the spacer sleeve 20 1856 05 00 05 to the lower M6 threaded hole.

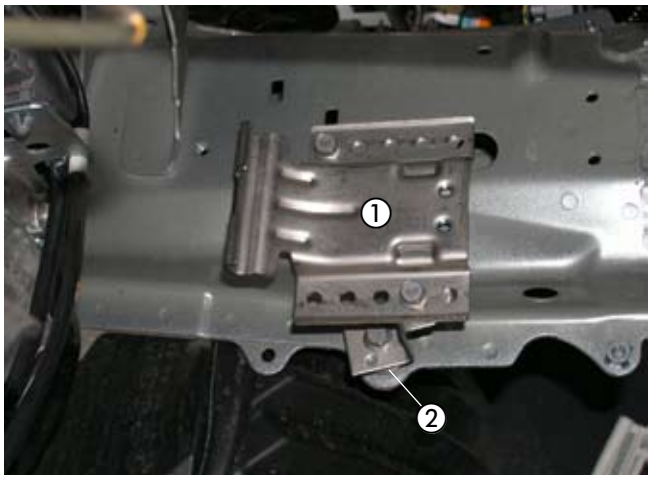

Photo 4

① Unit holder, installed
② Distance sleeve 20 1856 05 00 05

Premount the heater
(see photo 5)

Remove the duplicate nameplate from the heater.
Deface the inapplicable dates to make them illegible.
Attach the duplicate nameplate in a suitable, clearly visible position in the engine compartment.

Connect the 4 x 1.25 mm Ø fuel pipe with the 3.5 x 3 mm Ø fuel hose, length 50 mm, to the fuel connection of the heater.

Using a 16-25 mm Ø hose clip, connect the combustion air pipe to the heater and shape as shown in the photo.

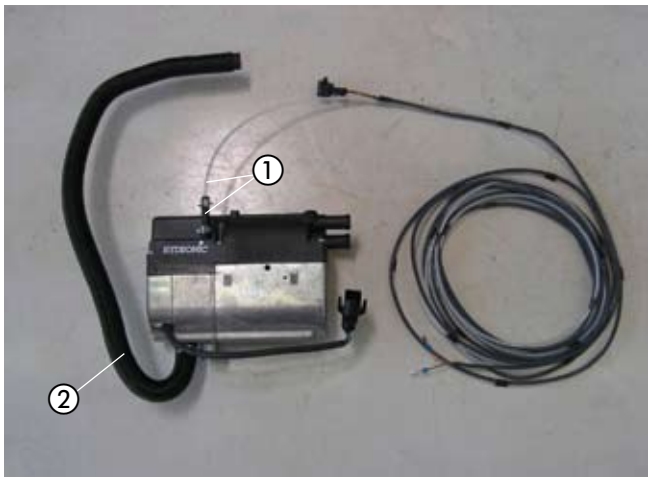

Photo 5

① Fuel pipe premounted to heater
② Combustion air pipe, connected

Install heater
(see photo 6)

Insert the premounted heater in the unit holder and fix in the lower threaded hole using the M6 x 95 screw with $6^{+0.5}$ Nm.

Take the combustion air pipe upwards in the elbow and lay in the protected section above the radiator.
Use cable ties to fix the combustion air pipe in suitable places.

Make a drain hole 2 mm Ø for condensation in the lowest point of the laid combustion air pipe.

Please note!

Lay the combustion air pipe so that only clean, dry combustion air is drawn in through the heater.

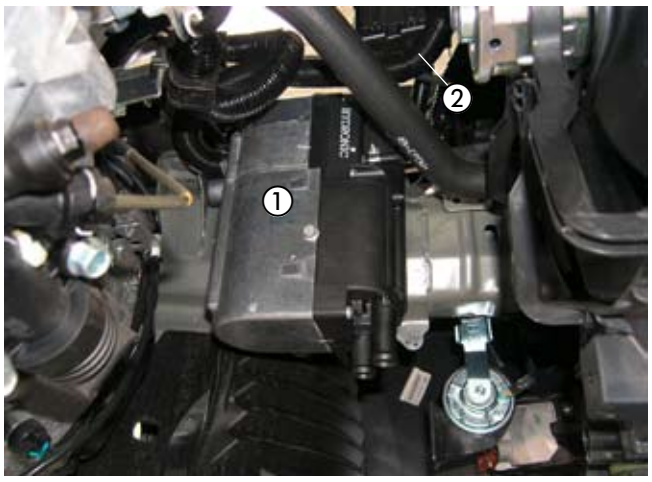

Photo 6

① Heater, installed
② Combustion air pipe, laid

3 Exhaust and combustion air system

Install and connect exhaust silencer
(see photos 7 and 8)

On the exhaust silencer, screw the holder (Z-bracket) with an M6 x 16 screw and a B6 body washer as shown in the photo.

Cut the exhaust pipe to a length of 280 mm.

Shape the exhaust pipe as shown in the photo and connect to the exhaust silencer inlet connection with a pipe clamp.

Cut the exhaust pipe end to a length of 230 mm.

Shape the exhaust pipe end as shown in the photo and connect to the exhaust silencer outlet connection with a pipe clamp.

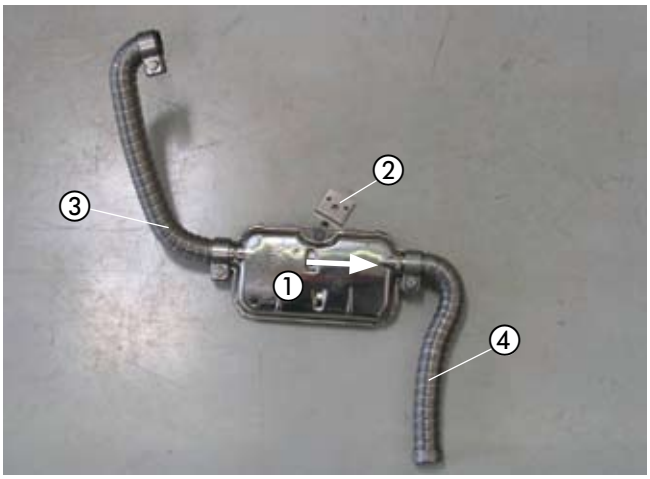

Photo 7

① Exhaust silencer
② Holder (Z-bracket) 20 1533 88 00 07, mounted
③ Exhaust pipe, connected
④ Exhaust pipe end, connected

Use the existing M6 screw of the left chassis beam to fasten the premounted exhaust silencer as shown in the photo.

Use a pipe clamp to connect the exhaust pipe to the heater outlet connection.

The arrow on the exhaust silencer for the direction of flow points to the front.

Please note!

When laying the exhaust pipes, ensure they are at a sufficient distance from adjacent body components.

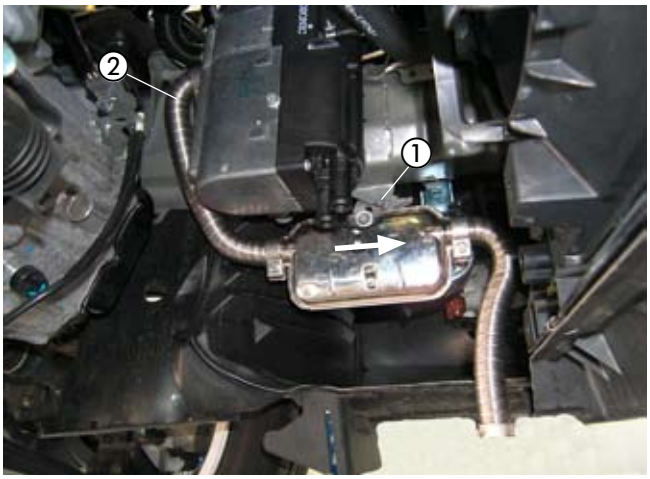

Photo 8

① Use the existing M6 screw to fasten the premounted exhaust silencer
② Exhaust pipe connected to heater

4 Water circuit

Prepare the water hoses
(see diagram 1)

Cut the water hoses according to the dimensions in the diagram and prepare.

Please note!

The water hoses are connected to the water circuit "inline", refer to the Technical Description, "Installation" chapter, "Connection to the Cooling Water Circuit" section.

Water hose ①
from engine to heater

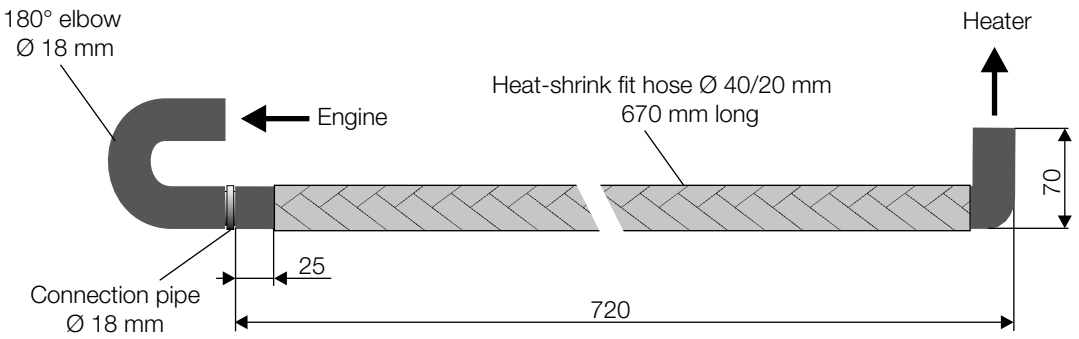

Water hose ②
from the heater to the heat exchanger

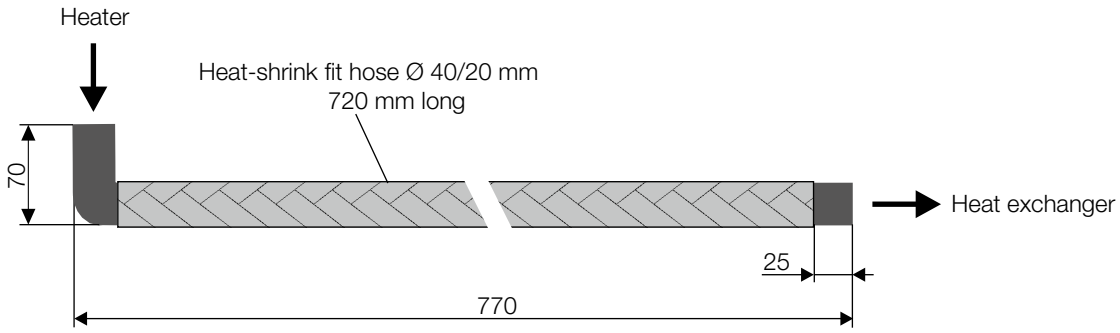

Diagram 1

4 Water circuit

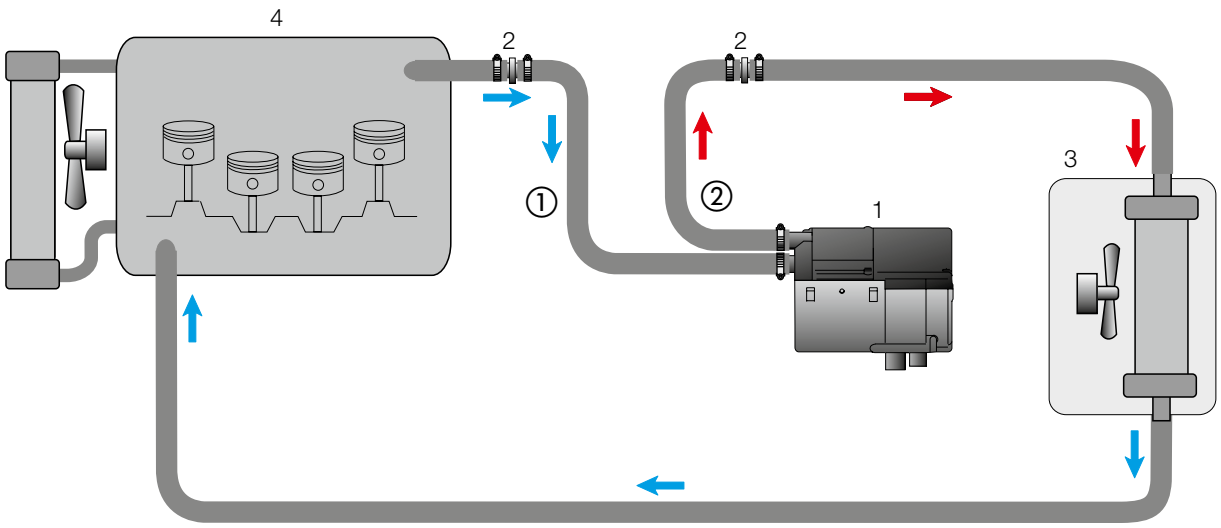

1 - Heater
2 - Vehicle water pipe Ø 18 mm
3 - Vehicle heat exchanger
4 - Engine
- Hose clip, Ø 20 – 32 mm

Diagram 2

Cut water flow hose
(see photo 9)

At the water flow hose from the engine to the heat exchanger (upper water hose at the heat exchanger), remove the piece of the vehicle's water hose between the water pipes: this is no longer needed.



Photo 9

① Remove piece of water hose between the water pipes

Lay and connect water hoses
(see photos 10 to 11 and diagram 2)

Connect the water hose ① to the heater's water inlet connection.

Connect the water hose ② to the heater's water outlet connection.

Lay the water hoses ① and ② to the disconnection point of the water flow hose.

Use cable ties to secure the water hoses ① and ③ to each other and to the the vehicle's cable loom.

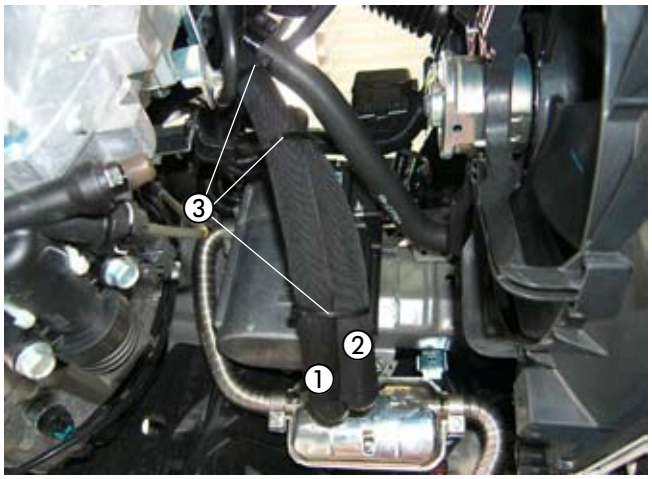

Photo 10

① Water hose ①
② Water hose ②
③ Cable ties

Connect the water hose ① to the engine's water pipe.

Connect the water hose ② at the water pipe elbow to the heat exchanger.

Use a cable tie to secure the water hoses ① and ② to the piping.

Please note!

Secure all hose connections with hose clips.
Protect the water hoses against chafing and use cable ties to secure in suitable positions.

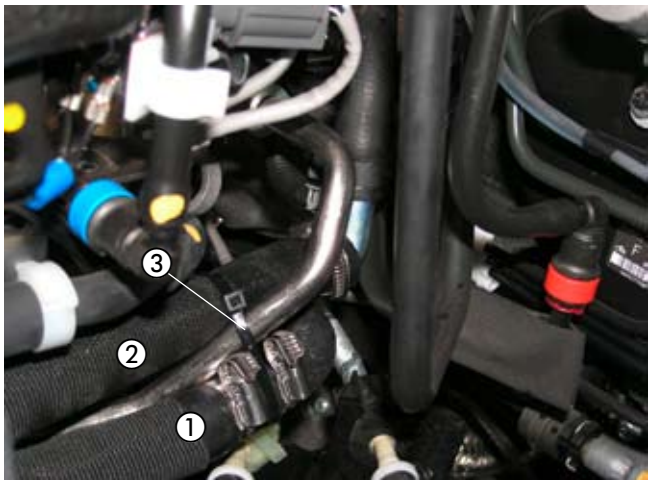

Photo 11

① Water hose ①
② Water hose ②
③ Cable ties

5 Fuel supply

Connect tank
(see photos 12 to 15)

Remove the tank according to the manufacturer's instructions.

Loosen the plug-in connection and the fuel line at the tank connection.

Remove the tank fitting from the tank by loosening the universal nut.

Cut approx. 3 mm off the slanted connection at the tank fitting.

Please note!

When opening the connection, ensure that no dirt gets into the supply lines.

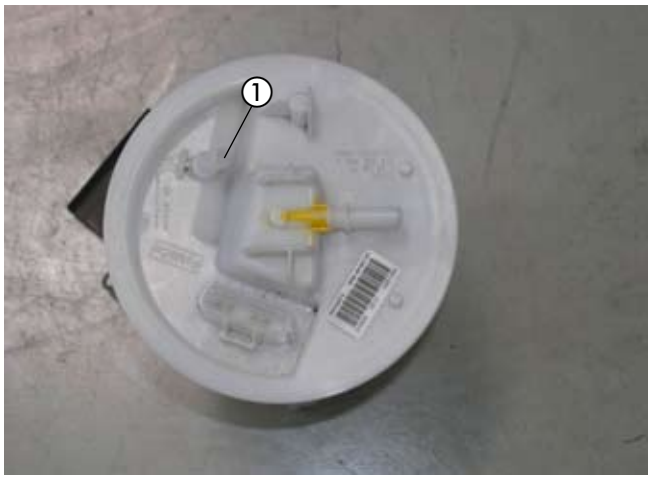

Photo 12

① Connection at the tank fitting

Use a hot air blower to heat and straighten the fuel pipe Ø 4 x 1 mm over a length of approx. 250 mm.

Shorten the 7.5/3.5 mm Ø adapter to a length of 40 mm and push onto the 4 x 1 mm Ø fuel pipe, position according to the dimensions shown in the photo and fasten to the 3.5 mm Ø of the adapter, using the 11 mm Ø clip.

Cut the end of the fuel pipe with a 45° cut.

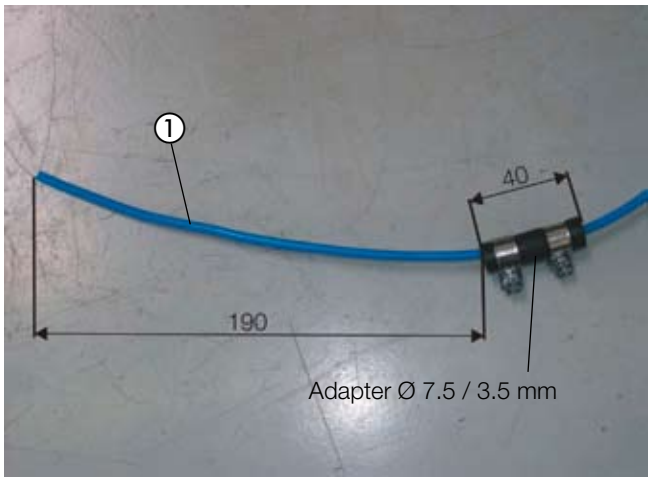

Photo 13

① 4 x 1 mm Ø fuel pipe, straightened, fitted to the 7.5/3.5 mm Ø adapter

Take the 4 x 1 mm Ø fuel pipe through the connection in the tank fitting, push the 7.5/3.5 mm Ø adapter onto the connection and screw tight with the 11 mm Ø clip.

Cut off the 3.5 x 3 mm Ø fuel hose, length 50 mm, at one end with an angle of approx. 45° and push onto the 4 x 1 mm Ø fuel pipe in the tank fitting.

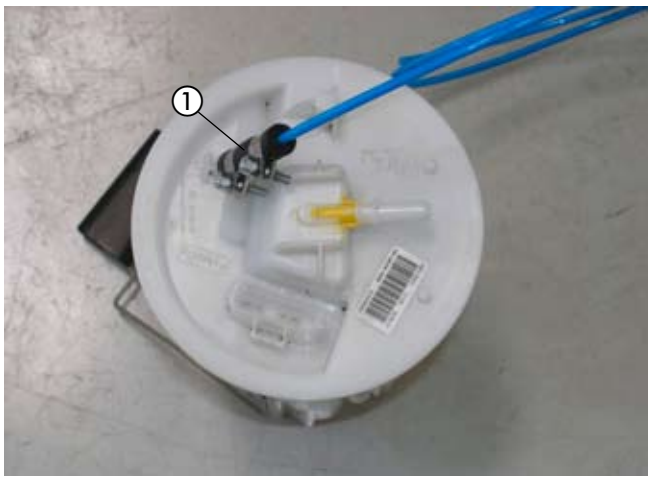

Photo 14

① 4 x 1 mm Ø fuel pipe connected with the 7.5/3.5 mm Ø adapter

5 Fuel supply

Insert the tank fitting back in the tank and ensure the seal fits properly.

Mount the tank back in position again, connecting the plug-in connection and the fuel pipe to the tank fitting once more.

Lay the 4 x 1 mm Ø fuel pipe along the vehicle's fuel line to the installation position of the metering pump to the right next to the tank.

Please note!

Secure all connection points with 9 mm Ø clips.

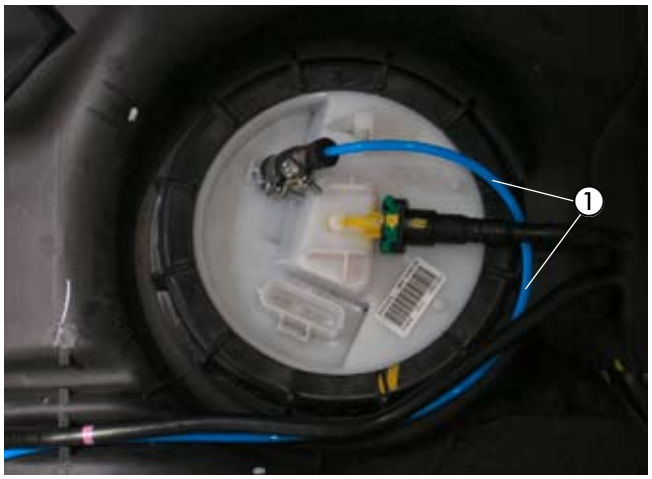

Photo 15

① Fuel pipe, 4 x 1 mm Ø , laid

Install and connect the metering pump
(see photos 16 and 17)

Insert the metering pump in the rubber holder and fasten to the existing M6 threaded hole of the right sill beam using an M6 x 20 screw and a B6 body washer as shown in the photo. Ensure it is installed with at least 15° rising gradient on the discharge side.
The discharge connection of the metering pump is pointing towards the rear.

Cut the 4 x 1 mm Ø fuel pipe from the 7.5/3.5 mm Ø adapter to the metering pump and connect to the 3.5 x 3 mm Ø fuel hose, length 50 mm at the intake connection of the metering pump.

Remove the mating connector of the metering pump connection at the main cable harness.
Remove the dummy plugs from the mating connector.
Plug the connector of the supplied metering pump cable into the metering pump connection of the main cable harness.

Lay the 4 x 1.25 mm Ø fuel pipe from the heater together with the metering pump cable along the vehicle's fuel line to the metering pump and fasten with cable ties.

Cut the 4 x 1.25 mm Ø fuel pipe to size and connect with 3.5 x 3 mm Ø fuel hose, length 50 mm, to the discharge connection of the metering pump.

Slot the plug-in contacts of the metering pump cable into the mating connector without noting the polarity and connect the mating connector to the metering pump.

Please note!

Use a sharp knife to cut the fuel pipe to length.
Secure all hose connections with hose clips.
When laying fuel lines, always ensure they are at an adequate distance from hot vehicle and heater parts.



Photo 16

① Metering pump with rubber holder, installed



Photo 17

① Fuel pipe, 4 x 1.25 mm Ø, and cable loom, laid

Install fuses and fan relay
(see photo 18 and diagrams 3 and 4)

Prepare the holder for the fuse and relay block as shown in the diagram.

Fasten the fuse holder with two M4 x 16 screws and the relay block with one M5 x 10 screw to the holder for the fuse and relay block.

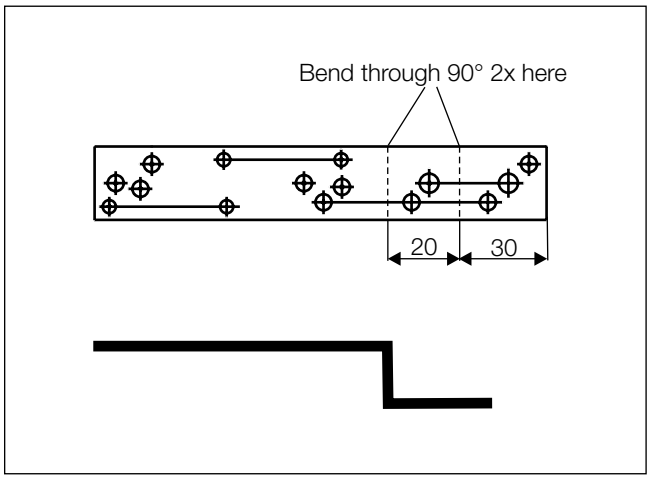

Diagram 3

Insert the 0.5 mm² br cable of the main cable harness in slot 85 of the relay block.

Remove the 0.5 mm² sw/rt cable of the main cable harness from the bushing connector housing and insert in slot 86 of the relay block.

Remove the dummy plug from the fuse block and connect the 4 mm² rt/ws cable of the relay block in the vacant slot of the fuse block.

Connect the 8 pin connector of the main cable harness with the 8 pin flat connector housing of the heater's cable loom.

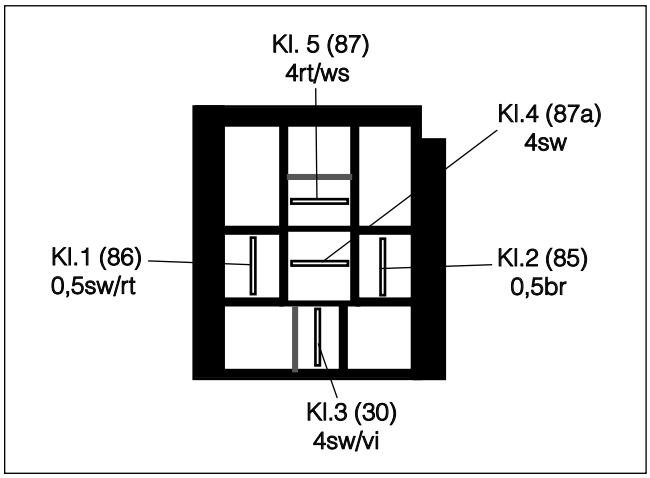

Diagram 4

View of the relay block from the cable inlet side

Mount the holder for the fuse and relay block to the existing M6 stud bolt on the wiper pan using an M6 nut.

Remove the 25 A fuse from the fuse bracket and insert a 10A fuse.

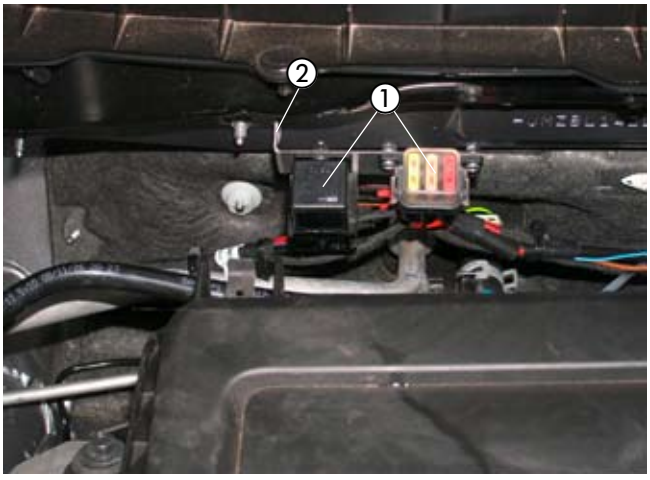

Photo 18

① Fuses and fan relay, installed
② Holder for fuse and relay block, installed

Cable laying
(see photo 19)

Make a 16 mm Ø hole in the engine partition at the pre-marked position behind the glove compartment for laying the cable looms and insert the 16.5 mm Ø grommet.

Lay the "Control" and "Fan control" cable looms through the grommet into the passenger compartment and up to the driver's side.



Photo 19

① 16.5 mm Ø grommet, inserted

Fan control for vehicles with manual or automatic AirCon
(see photo 20 and diagrams 5 and 6)

The fan control is at the central fuse box (heater 10A fuse F02) on the left side of the instrument panel.

Disconnect the two 0.5 mm² rs/gr cables from the 10 A heater fuse and integrate the 4 mm² sw and 4 mm² sw/vi cables with plug-in connectors as shown in the circuit diagram .

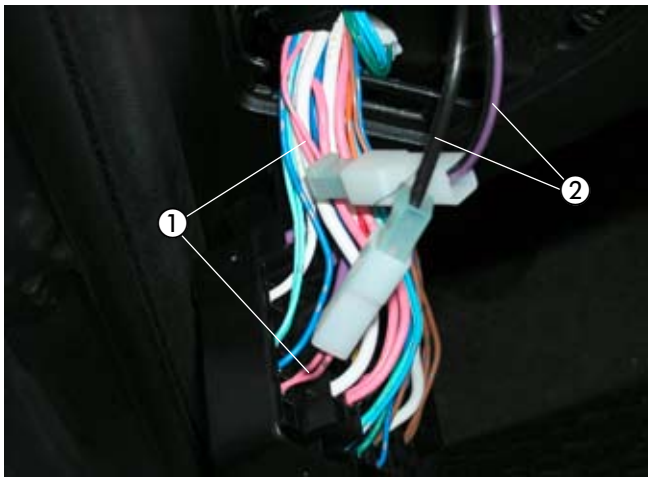

Photo 20

① Two 0.5 mm² rs/gr cables (heater 10A fuse), disconnected
② 4 mm² sw and 4 mm² sw/vi cables, integrated

Power supply
(see photo 21)

Take the 4 mm² rt plus cable to the positive terminal post of the battery, crimp on an A8 cable lug and connect to the positive terminal post.

Take the 2.5 mm² br earth cable to the negative terminal post of the battery and connect it there with the A6 cable lug.



Photo 21

① Positive cable 4 mm² rt, connected
② Earth cable 2.5 mm² br, connected

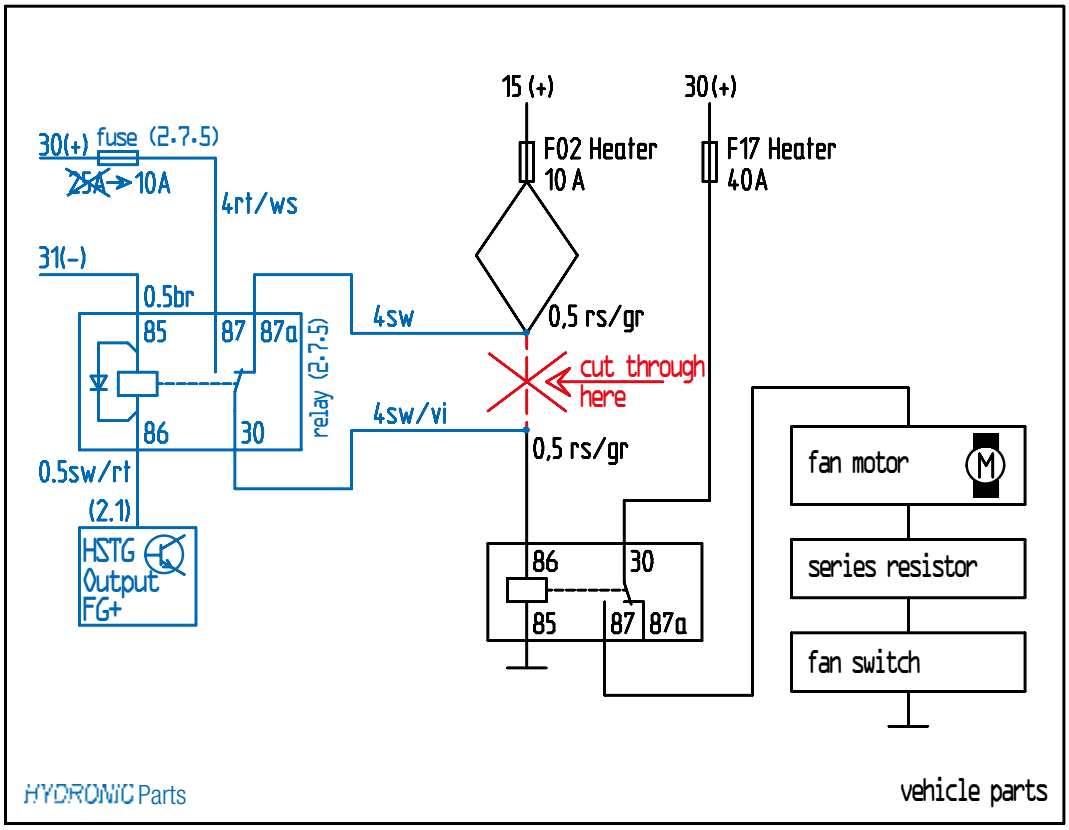

Diagram 5

Circuit diagram manual AirCon

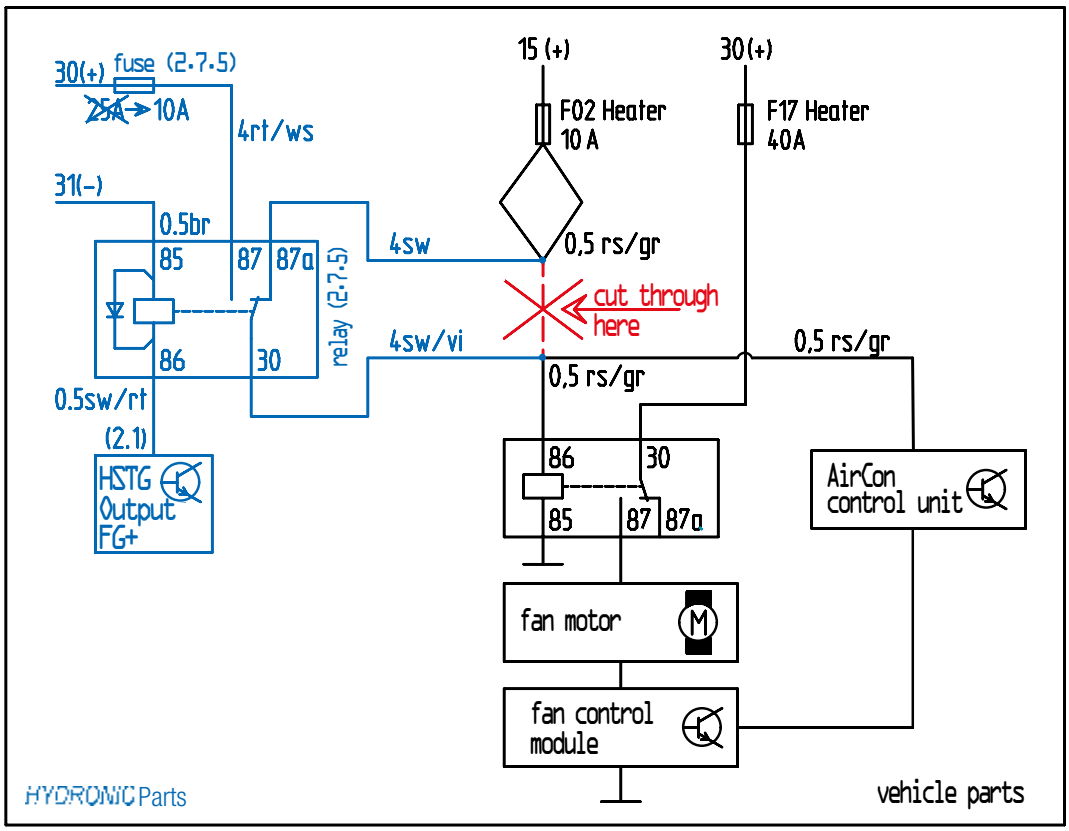

Diagram 6

Circuit diagram automatic AirCon

Install EasyStart T
(see photo 22)

The EasyStart T is installed according to the "EasyStart T" installation instruction.

Mount the EasyStart T timer with the console to the instrument panel covering below the switch unit.

Align the console on the mounting surface and trace the drillholes onto the mounting surface.
Make the Ø 3 mm and Ø 8 mm holes.
Remove the drilling template after making the holes.
Fix the console using the B 3.5 x 19 fixing screws supplied.

Take the "control" lead harness through the 8 mm Ø hole and use the expansion plug to premount the timer in the 6.5 mm Ø hole.
Push or screw the fixing screw into the expansion plug and use it to fix the timer.

Insert the flat connector from the "Control" lead harness into the 9 pin flat connector housing and insert the ready mounted bushing connectors in the bushing connector housing.
Push the fuse clasp into the flat connector housing.
Pull off the protective film of the cover cap and glue in the cover cap.



Photo 22

① EasyStart T, installed

Please note!

Do not decide on the installed location of the timer until after consulting the customer.

Install EasyStart R/R+ radio remote control (Alternative suggestion - consult with the customer)
(see photos 23 to 24 and diagram 7)

The EasyStart R/R+ is installed according to the Technical Description for the EasyStart R/R+ Radio Remote Control; see the "Installation Instruction" section.
Install the EasyStart R/R+ button to the cover on the left next to the cigarette lighter.
To this end, drill an 8 mm Ø hole in the panelling and insert the button in the hole.



Photo 23

① EasyStart R/R+ button, installed

6 Electrics

Prepare the holder for the stationary part of the EasyStart R/R+ as shown in the diagram.

Fix the stationary part of the EasyStart R/R+ to the holder using two M4 x 16 screws.

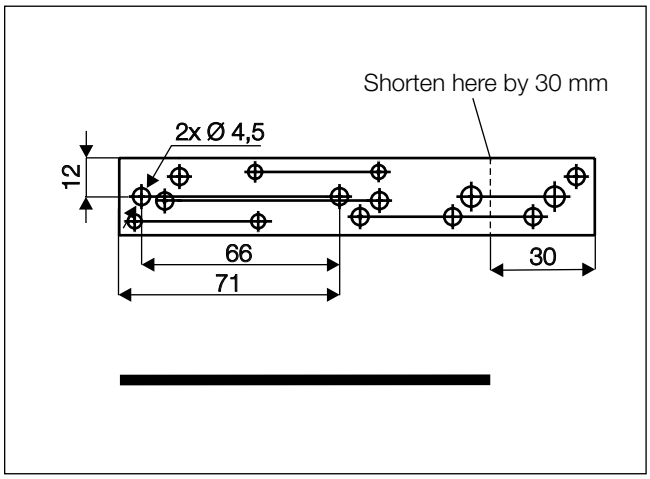

Diagram 7

Mount the stationary part of the EasyStart R/R+ with the holder behind the glove compartment to the supporting strut of the instrument panel to the existing M6 stud bolt, using an M6 nut.

Attach the temperature sensor of the EasyStart R/R+ to the panelling on the A-pillar in the passenger's footwell.

Lay the cables from the installed button and temperature sensor together with the "Control" cable loom to the installed position of the stationary part and connect to the stationary part.

Connect the antenna cable of the EasyStart R/R+ to the stationary part, guide to the right and lay in the rubber door seal on the passenger side.

Please note!

Avoid contact with metal parts at the uninsulated end of the antenna cable.
Use cable ties to fix any excessive length of antenna cable underneath the instrument panel.



Photo 24

① Stationary part of the EasyStart R/R+, installed with holder

7 After installation

Mount grommet for exhaust end pipe
(see photos 25 and 26)

Make a 38 mm Ø hole in the removed cowelling according to the dimensions shown in the photo.

Fit the 41 mm Ø grommet in the hole.

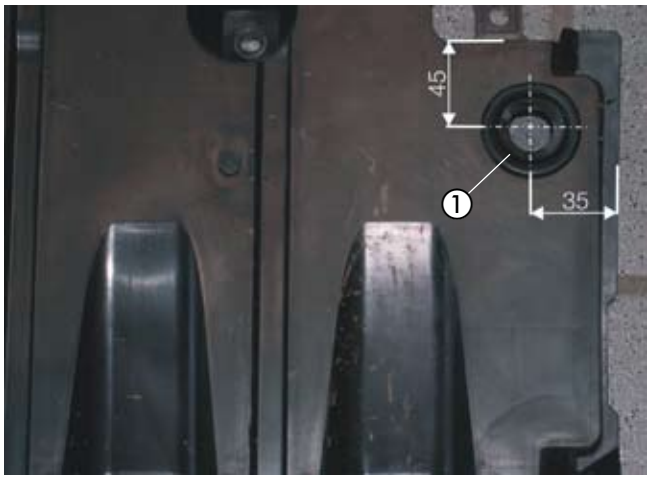

Photo 25

① Grommet for exhaust pipe end, installed

Mount the lower cowling and take the exhaust pipe end through the grommet.



Photo 26

① Exhaust pipe end taken through the grommet

Complete the vehicle

- Install all removed parts in the reverse order.
- Reconnect the battery.
- Check that the hoses, hose clips and pipe clamps as well as all electrical connections are fitted securely.
- Use cable ties to secure all loose cables, lines, etc.
- Set the clock time.
- If necessary, enter the radio code.
- Start the engine, vent the cooling system and check for leaks, top up any missing coolant liquid up to the marking (arrow).
- Please also note and follow the vehicle manufacturer's information on filling and venting the cooling system.
- Read and observe all official regulations and safety instructions in the Technical Description.
- Program the control and place the Operating Instructions together with the leaflet for the customer in the glove compartment.

Please note!

Fill the cooling system only with the coolant liquid specified by the vehicle manufacturer.

Starting up the heater

- Switch on the heater at the control.
  See Operating Instructions - Control.

8 Parts Overview

No.	Designation	Quantity	Order number
1	Vehicle-specific installation kit		24 8453 00 00 00
	Heater holder, new	1	
	Hexagon screw M6 x 95	1	
	Lead harness, heater	1	
	Holder, fuse	1	
	Exhaust silencer	1	
	Exhaust pipe, L = 300 mm	1	
	Hose, shaped, 18 mm Ø	1	
	Hose clip, 16 - 25 mm Ø	1	
	Hose clip, 20 - 32 mm Ø	6	
	Pipe clamp, 26 - 28 mm Ø	3	
	Holder, metering pump	1	
	Lead harness, metering pump	1	
	Fuel hose, 3.5 x 3 mm Ø, L = 50 mm	3	
	Hose clip, one-piece with clamping jaws	6	
	Fuel pipe, 4 x 1 mm Ø	2 m	
	Fuel pipe, 4 x 1.25 mm Ø	5 m	
	Cable tape, 2.5 x 100 mm	10	
	Cable tape, 5.0 x 200 mm	20	
	Cable tie with internal toothing	5	
	Hexagon screw M4 x 16	2	
	Hexagon nut M4	2	
	Hexagon screw M5 x 10	1	
	Hexagon nut M5	1	
	Hexagon screw M6 x 16	5	
	Hexagon screw M6 x 20	1	
	Hexagon nut M6	6	
	Holder (Z-bracket)	2	
	Distance sleeve	1	
	Holder R^+	1	
	Hexagon screw M6 x 25	1	
	Body washer B6	2	
	Screw M4 x 16	2	
	Hexagon nut M4	2	
	Grommet Ø 41 mm	1	
	Water hose elbow 180°, 18 mm Ø	1	
	Connection tube, Ø 18 mm	1	
	Hose clip, 20 - 32 mm Ø	1	
	Adapter, 7.5 x 3.5 mm Ø	1	
	Clamp 11 mm Ø	2	
	Fan cable loom	1	
	Relay 12V	1	
	Flat connector housing	2	
	Push-on sleeve housing	2	
	Flat connector B 6.3-6	1	
	Bushing connector B 6.3-6	1	
	Flat connector B 6.3-1	1	
	Bushing connector B 6.3-1	1	
	Cable lug A8	1	
	Grommet Ø 16.5 mm	1	
	Fuse 10 A	1	
	Exhaust pipe	0.3 m	
	Heat-shrink fit hose Ø 40/20 mm	1.4 m	
	Hose Ø 3.5 x 50 mm	0.05 m	

9 Leaflet for the customer

Before switching on
in vehicles with manual AirCon
(see photo 1)

- Before switching on or pre-programming heating mode with the ignition switched on, set the vehicle's temperature controller ① to "Hot" (maximum setting).
- Set the fan controller ② to level 1 or 2.
- Set the controller for the air system ② to Defroster. Maximum air directed to the front windscreen.



Photo 1

① Temperature controller
② Fan controller
③ Air system controller

Before switching on
in vehicles with automatic AirCon
(see photo 2)

- Before switching on or pre-programming heating mode with the ignition switched on, set the vehicle's temperature controller ① to "Hot" (maximum setting).
- Set the fan controller ② to level 1 or 2.
- Switch the button for the air system ③ to Defroster. Maximum air directed to the front windscreen.



Photo 2

① Temperature controller
② Fan controller
③ Button for the air system
④ Switch for the seat heating

Please note!

Before switching on or preprogramming the heating mode, adjust the seat heating switches ④ to the 0 setting.