INSTALLATION RECOMMENDATIONS
HYDRONIC S3 – D 5 E IN THE MERCEDES X-CLASS



THIS INSTALLATION RECOMMENDATION APPLIES TO VEHICLES FROM MODEL YEAR 2017 WITH THE FOLLOWING MOTORISATION:

2.3 l cubic capacity / X 220 d / 120 kW - 163 HP

2.3 l cubic capacity / X 250 d / 140 kW - 190 HP

WICHTIG für den elektrischen Anschluss der Hydronic S3 CS Heizgeräte: Bitte beachten Sie die Hinweise am Ende dieses Einbauvorschlages!

IMPORTANT NOTE for the electrical wiring of Hydronic S3 CS heaters: Please read the reference at the end of this installation recommendation!

A WORLD OF COMFORT

Eberspächer

CONTENTS

CHAPTER	CHAPTER DESCRIPTION	PAGE
1	Introduction	3-6
2	Preparation of the vehicle	6
3	Preliminary assembly	7-9
4	Installation	10-22
5	After installation	23-24
6	Parts Overview	25
7	Instructions for initial commissioning	26 - 34
8	Leaflet for the Customer	35

This installation recommendation documents the installation of the Hydronic S3 heater in a vehicle from model year 2017 with the following equipment:

- **with 2-zone automatic aircon (Thermotronic) or air-conditioning system**
- **with manual gearbox or automatic gearbox**

PLEASE NOTE!

This installation recommendation is valid for the above mentioned vehicle to the exclusion of all liability claims. Deviating model years and/or deviating equipment may result in modifications to this installation recommendation.
It is therefore mandatory to check the feasibility of installing the heater in the vehicle before starting work.
All liability claims resulting from modifications to the vehicle are excluded.

Installation time: approx. 8 hours

1 INTRODUCTION

SPECIAL TEXT FORMATS, PRESENTATIONS AND PICTURE SYMBOLS

In this installation recommendation, special text formats and picture symbols are used to emphasise different contents. Please refer to the following examples for their meanings and appropriate action.

SPECIAL TEXT FORMATS AND PRESENTATIONS

- This dot (▪) denotes a list, which is started by a heading.
  - If an indented dash (–) follows a “dot”, this list is a sub-section of the black dot.

PICTURE SYMBOLS

DANGER!

This information points out a potential serious or fatal danger. Ignoring this information can result in severe injuries.

➔ This arrow indicates the appropriate precaution to take to avert the danger.

CAUTION!

This information points out a dangerous situation for a person and / or the product. Ignoring this information can result in injuries to people and / or damage to machinery.

➔ This arrow indicates the appropriate precaution to take to avert the danger.

PLEASE NOTE!

These remarks contain recommendations for use and useful tips for the operation, installation and repair of the heater.

SAFETY INSTRUCTIONS FOR INSTALLATION AND REPAIR

DANGER!

Improper installation or repair of Eberspächer heaters can cause a fire or result in toxic exhaust entering the inside of the vehicle.
This can cause serious and even fatal risks.

➔ Only authorised and trained persons may install the heater according to the specifications in the technical documents or repair it using original spare parts.

➔ Installation and repairs by unauthorised and untrained persons, repairs using non-original spare parts and without the technical documents required for installation and repair are dangerous and therefore are not permitted.

➔ Installation according to this installation recommendation may only be carried out in conjunction with the respective unit-related technical description, installation instructions, operating instructions and maintenance instructions.
This document must be carefully read through before / during installation and repair and followed throughout. Particular attention is to be paid to the official regulations, the safety instructions and the general information.

PLEASE NOTE!

- The relevant rules of sound engineering practice and any information provided by the vehicle manufacturer are to be observed during the installation and repair.
- When carrying out electric welding on the vehicle, the positive cable at the battery should be disconnected and earthed to protect the control box.

LIABILITY CLAIM / WARRANTY

Eberspächer does not accept any liability for defects and damage, which are due to installation or repair by unauthorised and untrained persons.
Compliance with the official regulations and the safety instructions is prerequisite for liability claims.
Failure to comply with the official regulations and safety instructions leads to exclusion of any liability of the heater manufacturer.

ACCIDENT PREVENTION

General accident prevention regulations / health and safety regulations and the corresponding workshop, company and operating safety instructions are to be observed.

1 INTRODUCTION

ADDITIONAL INFORMATION ON THE VALIDITY OF THE INSTALLATION RECOMMENDATION

The installation recommendation is valid for the vehicle with the engine and gearbox options listed in the following.

ENGINE AND GEARBOX OPTIONS

Cubic capacity	kW / HP	Gearbox
2.3l	118 / 160	6 S
2.3l	140 / 190	6 S
2.3l	140 / 190	7 A

6 S = 6 gear manual gearbox

7 A = 7 gear automatic gearbox

PLEASE NOTE!

- The installation recommendation is not valid for right-hand drive vehicles.
- Vehicle models, engine types and feature options not listed in this installation recommendation, have not been tested.
  Installation according to this installation recommendation can still be possible.

INITIAL STARTUP OF THE HEATER OR FUNCTIONAL TEST

- After installation or carrying out a repair on the heater, the coolant circuit and the whole fuel supply system must be carefully vented. Comply with the instructions issued by the vehicle manufacturer.
- Open all heating circuits before the trial run (set the temperature controller to "hot").
- During the heater trial run, all water and fuel connections must be checked for leaks and secure, tight fit.
- If faults occur while the heater is running, use a diagnostic unit to correct the cause of the fault.

PARTS REQUIRED FOR INSTALLATION

QUANTITY	DESIGNATION	ORDER NO.
1	Hydronic S3 - D 5 E	25 2912 05 0000
1	Vehicle-specific installation kit	24 8000 35 0024
EasyStart control unit as chosen:		
1	EasyStart Remote	22 1000 34 2300
1	EasyStart Remote+	22 1000 34 1700
1	Easy Start Web	22 1000 34 5100

SPECIAL TOOLS REQUIRED

- Necessary torque wrench
- Anti-corrosion agent
- Pliers for spring band clamps
- Crimping tool
- Step drill

TIGHTENING TORQUES

If no tightening torques are specified, tighten the screw connections according to the following table:

Part name	Tightening torques
Hex screw M6	10 $^{+1}$ Nm
Hex screw M8	20 $^{+2}$ Nm
Hex screw M10	45 $^{+2}$ Nm
Torx screw M6 x 14.5	6 $^{+0.5}$ Nm
Screw M4 x 16	3 $^{+0.5}$ Nm
Screw M5 x 10	5 $^{+0.5}$ Nm
Pipe clip for exhaust pipe	7 $^{+1}$ Nm
Hose clip for water hose	3 $^{+0.5}$ Nm
Hose clip for combustion air pipe	3 $^{+0.5}$ Nm
Hose clip for fuel pipe	1 $^{+0.2}$ Nm

1 INTRODUCTION

INSTALLATION DRAWING

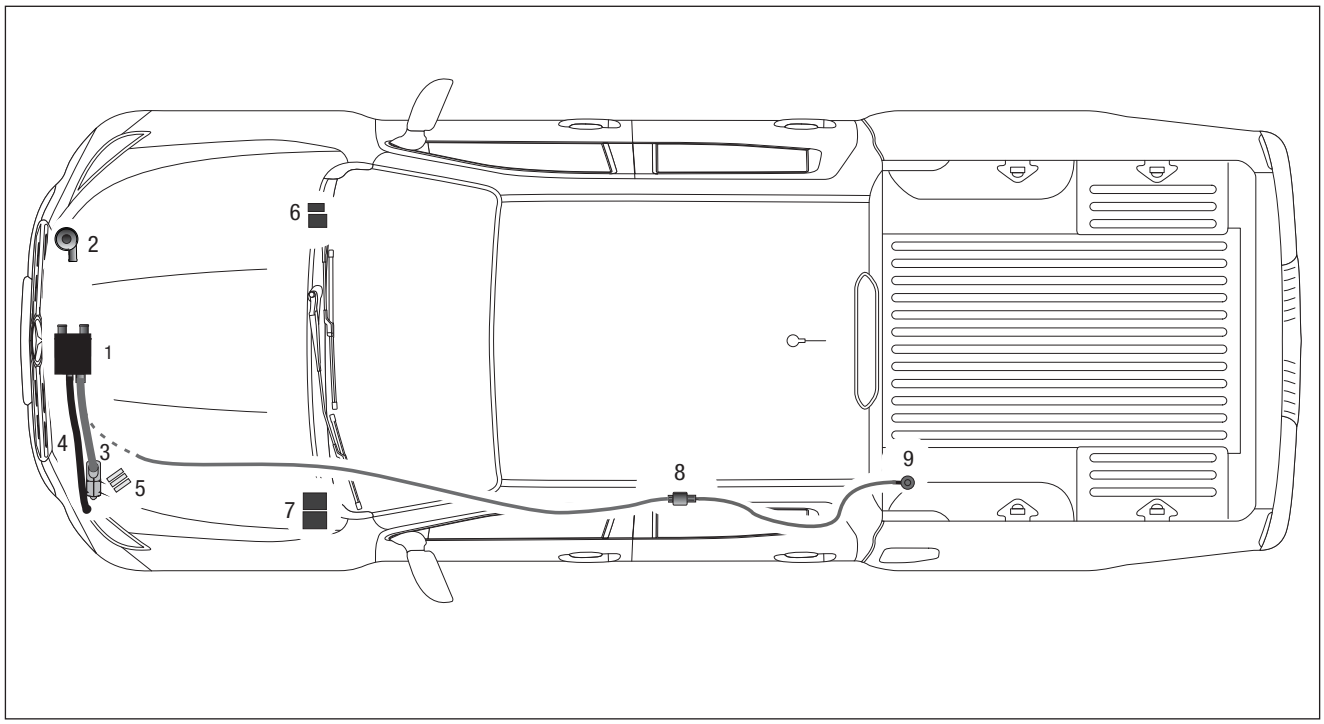

1 Heater
2 Water pump
3 Exhaust pipe with exhaust silencer
4 Combustion air pipe
5 Fuse holder
6 Fan relay + "EasyFan" relay
7 Stationary part of control unit + “EasyFan” fan control box
8 Metering pump
9 Fuel tank extractor

2 PREPARATION OF THE VEHICLE

PREPARATORY WORK ON THE VEHICLE

- Disconnect the battery
- Remove centre console with aircon control (expose AC amplifier)
- Remove the left lower trim moulding of the instrument panel
- Remove glove compartment
- Depressurise the cooling system
- Drain coolant into a clean container
- Remove the front bumper
- Remove the tank

ONLY IN VEHICLES WITH AUTOMATIC GEARBOX

INSTRUCTION FOR REMOVING THE SELECTOR LEVER GATE
(see photo 1)

Pull the selector lever cover down, remove the safety clip and pull the selector lever knob up.

Unclip and lift the shift gate of the centre console.

Disconnect the electrical connections and remove the shift gate.



Fig. 1
① Remove cover and safety clip
② Shift gate retaining clamps

INSTRUCTIONS FOR REMOVING THE CENTRE CONSOLE
(see photo 2)

Remove the gear-shift lever and the gear-shift lever gaiter.

Remove the side covers (4x) of the screws and undo the screws.

Pull the centre console backwards.

This gives access to the AC amplifier connector behind the aircon control.

The centre console can also be completely removed if necessary.



Fig. 2
① remove the screws (4x) of the centre console

3 PRELIMINARY ASSEMBLY

PREPARE HEATER
(see photo 3 and diagram)

Mount one straight and one angled water connection socket to the heater as shown.

Remove the duplicate nameplate from the heater.



Fig. 3
① Water connection socket mounted on the heater

Installation steps

- Grease the O-ring (5) and insert in the groove at the connection socket.
- Reconnect the battery.
- Fit the connection socket (3 or 4) in the cut-outs of the sensor cover (2). The collar of the connection socket is above the cover.
- Position the connection socket with the toothed edge in the sensor cover and fix accordingly.
- Fit the sensor cover on the heater with the connection socket pointing forwards.
- Press the connection socket completely into the corresponding holes on the heat exchanger.
- Adjust the direction for the angled connection socket:
  – Raise the sensor cover up to the collar of the connection socket
  – Turn the connection socket in the required direction
  – Push the sensor cover down and readjust the position of the connection socket so that the toothed edges engage again
- Fasten sensor cover with M5 x 18 (1) screw
  (torque $6.5^{+0.5}$ Nm).

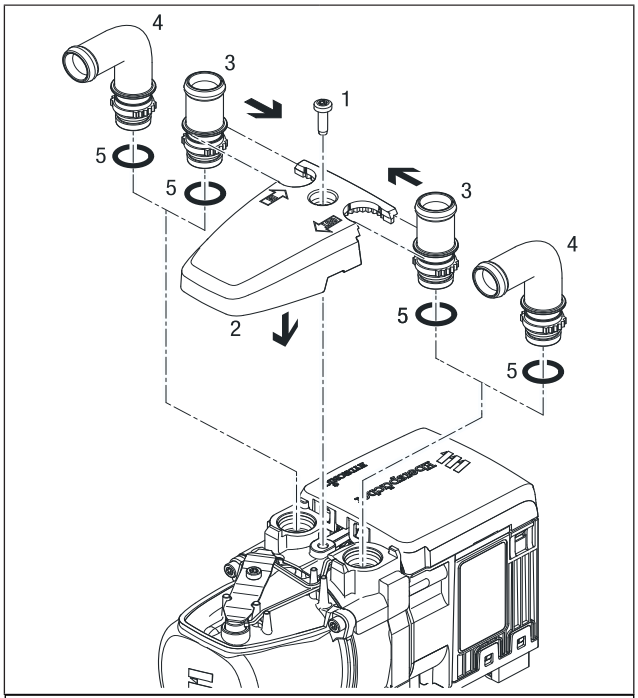

1 Screw M5 x 18	4 Angled connection socket
2 Sensor cover	5 O-ring
3 Connection socket, straight	

3 PRELIMINARY ASSEMBLY

PREPARE WATER PUMP (SEE FIG. 4)

Insert the water pump in water pump holder as shown.

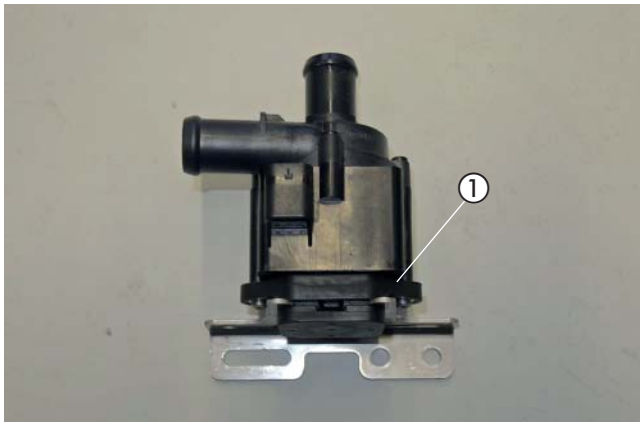

Fig. 4
① Prepare the water pump

PREPARE METERING PUMP
(see photo 5)

Insert the metering pump in the rubber holder and fit the 90° holder using the M6 x 25 screw and a B6 body washer as shown.

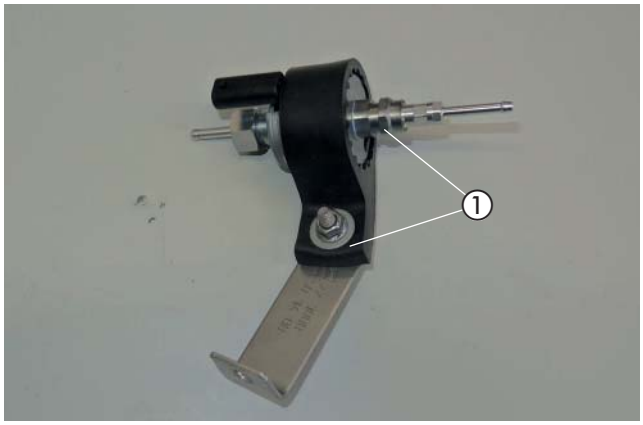

Fig. 5
① Metering pump inserted and 90° holder mounted

PREPARE FUSE BLOCK HOLDER
(see photo 6)

Mount the holder (90° elbow, 9502) to the fuse block holder with an M6 x 12 screw as shown.

Fasten the fuse block to the fuse block holder using two M4 plastic rivets.

Slot the connector holder into the existing oblong hole.
Fasten the diagnostic connector in the connector holder.

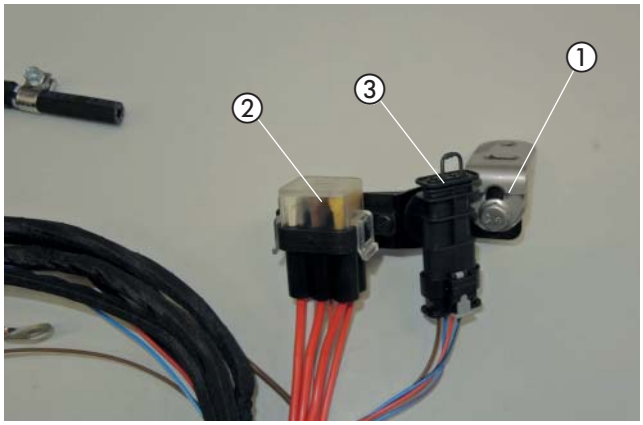

Fig. 6
① Holder (90° elbow, 9502) mounted
② Fuse block mounted on the holder
③ Diagnostic connector

3 PRELIMINARY ASSEMBLY

PREPARE FAN RELAY / “EASYFAN” RELAY BLOCK
(see photo 7)

Snap the relay block of the fan relay together with the EasyFan relay block.

Insert the 1.0 mm² red cable from the fuse pick-up in the free slot (terminal 87) of the EasyFan relay block.

Insert two 5A mini tab receptacle fuses in the slots of the fuse pick-up.

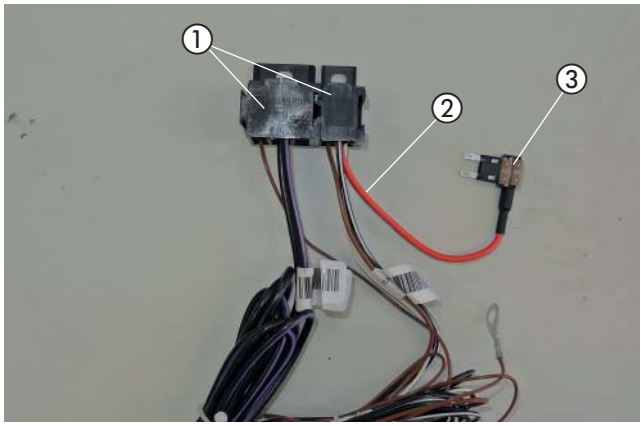

Fig. 7
① Relay blocks snapped together
② 1.5 mm² red cable from fuse adapter inserted
③ 2x 5A mini tab receptacle fuses inserted

PREMOUNT STATIONARY PART OF THE CONTROL UNIT + FAN CONTROL BOX
(see photos 8 ot 9)

INSTALLATION OF RADIO REMOTE CONTROLLED EASYSTART REMOTE/ REMOTE+

Mount the EasyFan fan control box together with the stationary part of the EasyStart Remote/Remote+ to the holder using two M4 x 16 screws.

Plug the 8-pin connector from the fan control box lead harness into the fan control box.



Fig. 8
① Stationary part of EasyStart Remote/Remote+ mounted
② EasyFan fan control box mounted with lead harness

INSTALLATION OF RADIO REMOTE CONTROLLED EASYSTART WEB

Mount the EasyFan fan control box together with the stationary part of the EasyStart Web to the holder using two M4 x 16 screws.

Plug the 8-pin connector from the fan control box lead harness into the fan control box.

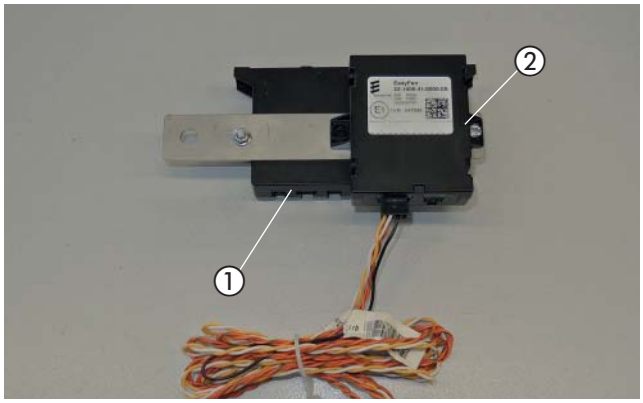

Fig. 9
① Stationary part of the EasyStart Web mounted
② EasyFan fan control box mounted with lead harness

4 INSTALLATION

INSTALL HEATER
(see photos 10 and 11)

The installation position for the heater is on the centre strut of the radiator support in front of the vehicle radiator.

Mount the holding plate for the heater to the two lower M8 stud bolts of the centre strut.

At the upper fastening point, fasten the holding plate to the existing hole in the centre strut with an M8 x 16 screw.

Push edge protection onto the left upper corner of the holding plate to protect the vehicle water hoses.

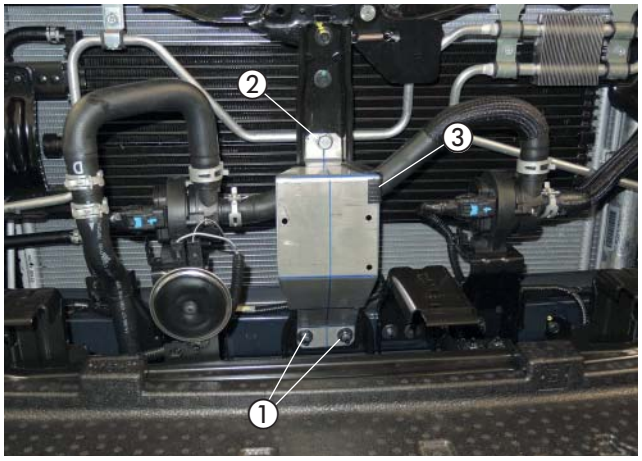

Fig. 10
① Holding plate mounted to existing M8 stud bolt
② Holding plate mounted to existing hole with M8 x 16
③ Edge protection pushed on

Use 3 self-tapping M6 x 16 Torx screws to fasten the heater to the holding plate.

The exhaust connection points to the left.

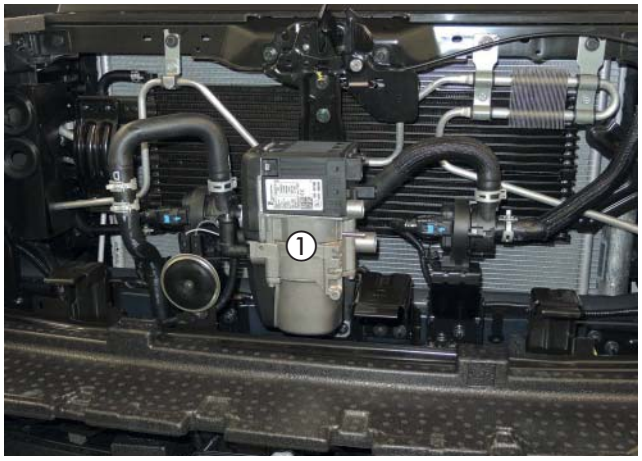

Fig. 11
① Mounted heater

MOUNT COMBUSTION AIR PIPE
(see photo 12)

Fasten the combustion air pipe on the clamped side to the heater with a 16 - 25 mm Ø hose clip and take it to the left in the protected area under the headlight.

Use cable ties to fix the combustion air pipe in suitable places.

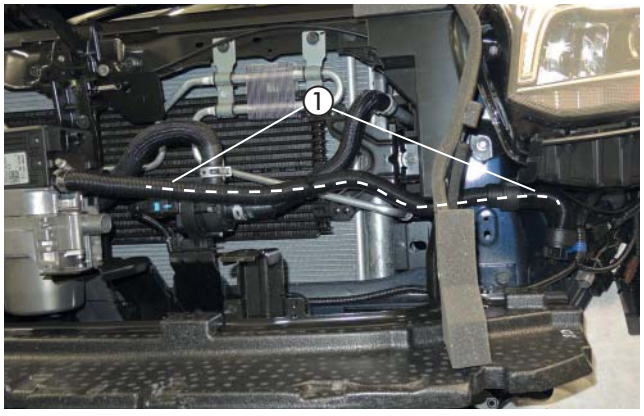

Fig. 12
① Combustion air pipe laid

4 INSTALLATION

MOUNT EXHAUST SYSTEM
(see photos 13 to 15)

Drill a 38 mm Ø hole in the free space of the trim moulding on the left-hand side as shown.

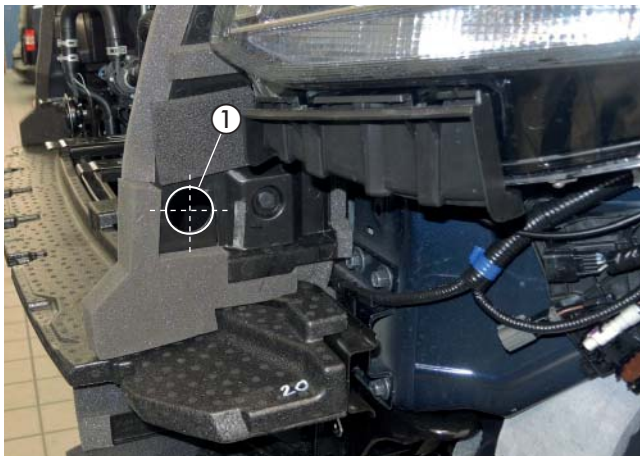

Fig. 13
① Drilled 38 mm Ø hole

Screw the premounted exhaust silencer with the holder to the existing M12 screw of the front beam.

Mount the exhaust silencer at an angle as shown.

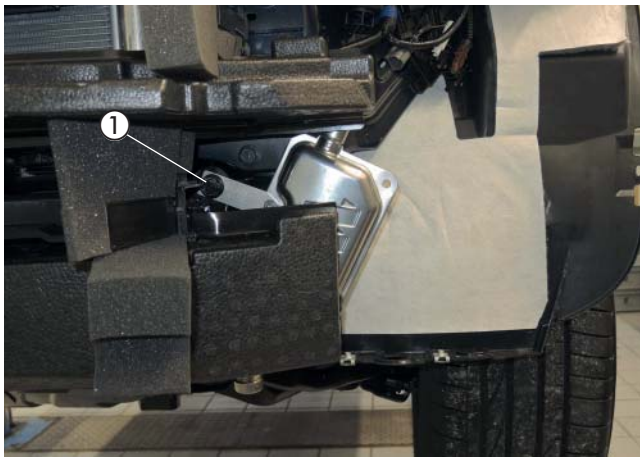

Fig. 14
① Exhaust silencer holder mounted with M12 screw

Take the premounted exhaust pipe through the drilled 38 mm Ø hole and fix in the hole with the grommet.

Connect the exhaust pipe to the heater exhaust connection and to the exhaust silencer.

⚠ CAUTION!

When laying the exhaust pipes, ensure they are at a sufficient distance from adjacent body components.

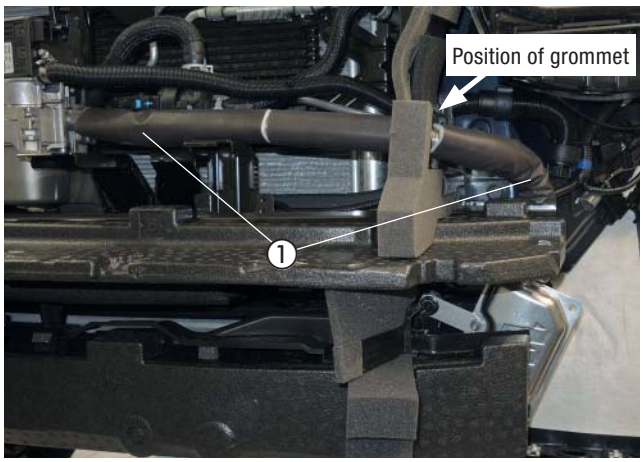

Fig. 15
① Exhaust pipe, connected

4 INSTALLATION

MOUNT WATER PUMP AND PREPARE WATER HOSES
(see photos 16 and 17)

Mount the prepared water pump to the strap on the left of the front crossbeam as shown, using an M6 x 12 screw.

Drill two 38 mm Ø holes in the free space of the plastic trim above as shown.

Insert grommets in the two drilled holes.



Fig. 16
① Water pump mounted
② 2 x 38 mm Ø hole drilled and grommets inserted

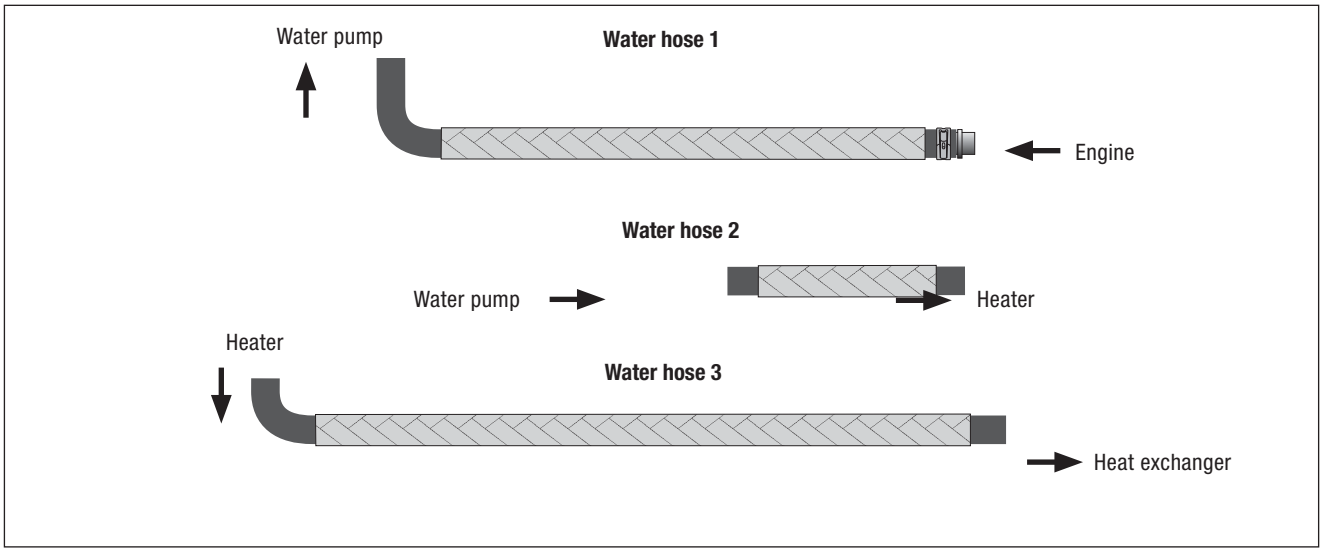

Fig. 17

CUT THROUGH WATER FLOW HOSE
(see photo 18)

Cut the water flow hose (the right connection at the heat exchanger) according to the dimensions shown.

Pull the piece off the pipe connection socket, it is no longer required.

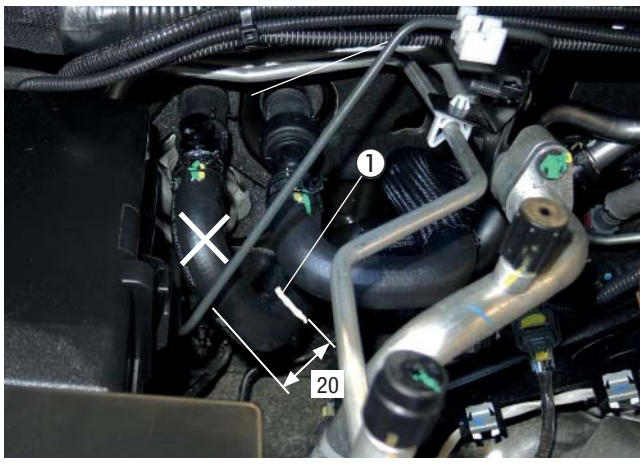

Fig. 18
① Water flow hose cutting point

4 INSTALLATION

LAY AND CONNECT WATER HOSES
(see photos 19 to 23)

Connect water hose 1 at the intake end of the water pump and take through the grommet into the engine compartment.

Connect water hose 2 to the discharge end of the water pump and connect to the heater inlet connection.

Connect water hose 3 at the water outlet connection of the heater and take through the upper grommet into the engine compartment.

CAUTION!
Secure the water hoses with clamps.

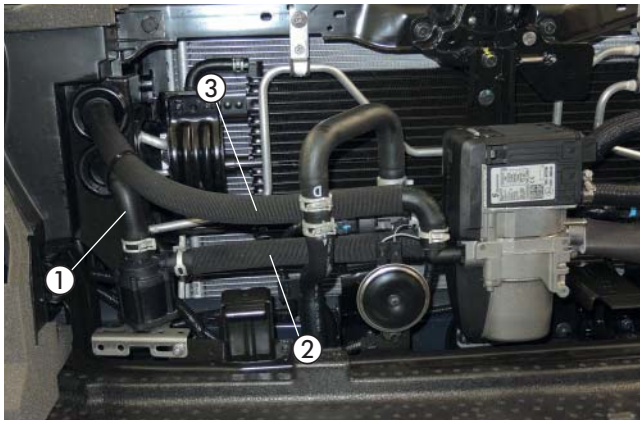

Fig. 19
① Water hose 1
② Water hose 2
③ Water hose 3

Lay the water hoses 1 and 3 along the air filter box up to the cutting point of the water flow hose.

PLEASE NOTE!

Prefill the water hoses during installation.

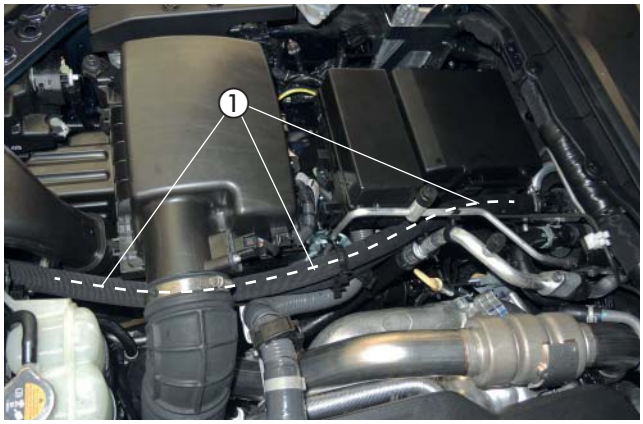

Fig. 20
① Water hoses 1 and 3 laid in engine compartment

Lay the water hoses from the heater through the engine compartment to the cutting point.

Connect water hose 1 with 20 mm Ø connection pipe to the water flow hose to the engine.

Connect water hose 3 at the water flow connection socket from the heat exchanger.

CAUTION!
Secure the hose connections to the vehicle with 20 - 32 mm Ø hose clips.

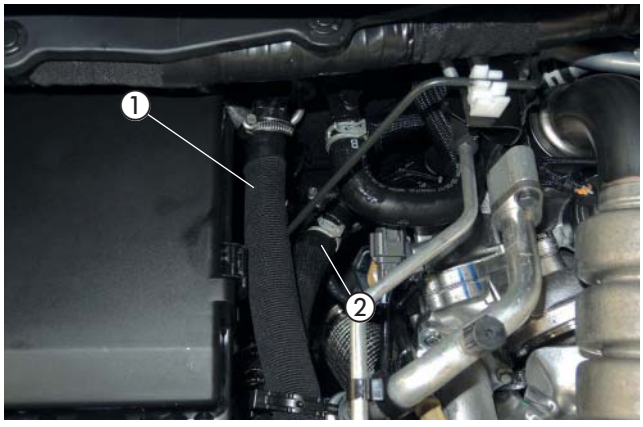

Fig. 21
① Water hose 3 connected
② Water hose 1 connected

4 INSTALLATION

Use rotatable hose holders to attach the water hoses to the aircon pipes.

Also use cable ties in suitable places to fasten them together.

CAUTION!
Secure all hose connections with hose clips.

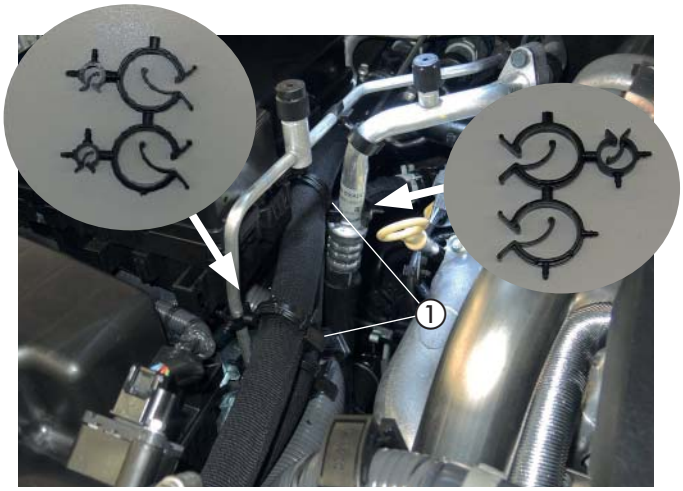

Fig. 22
① Rotatable hose holder, mounted

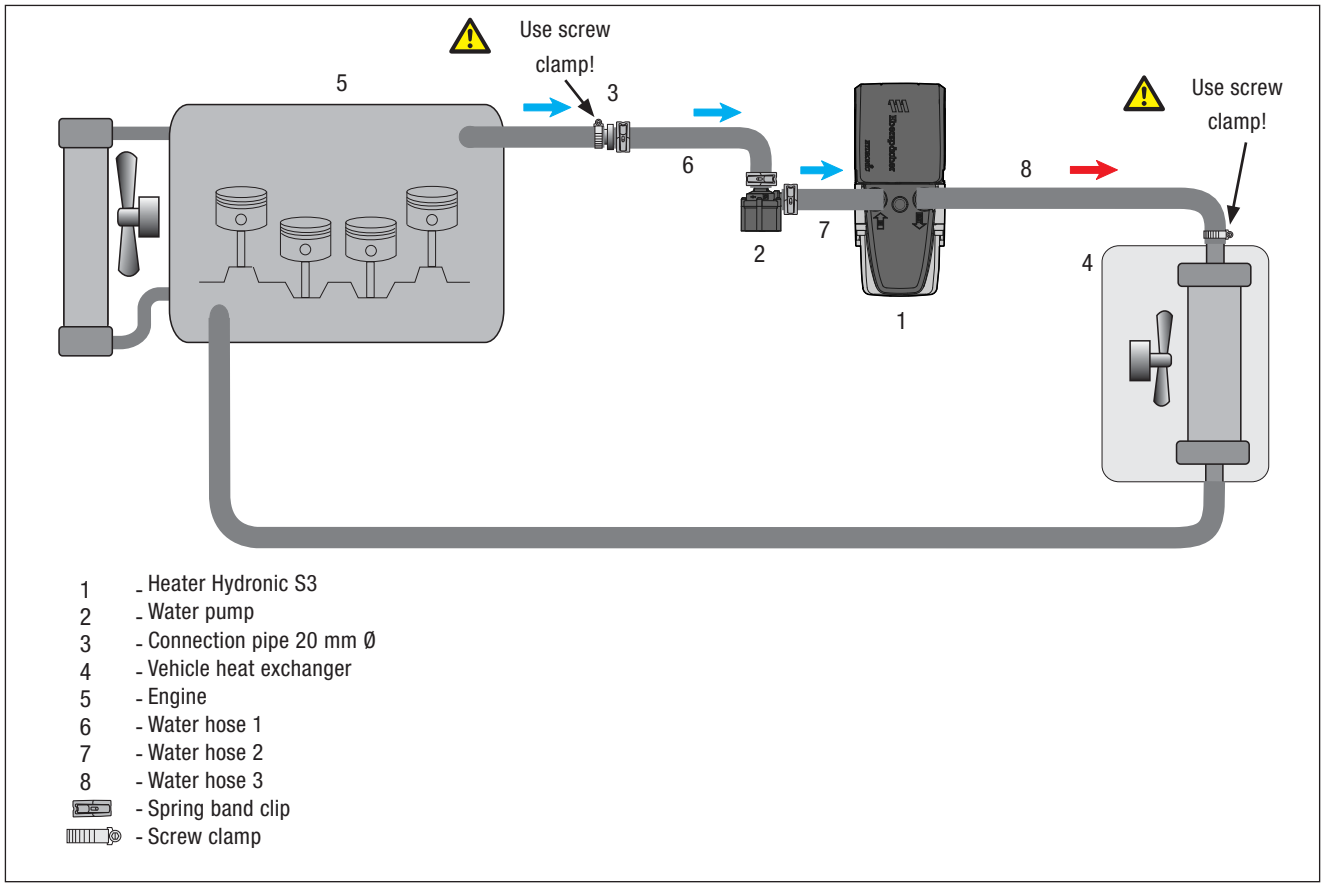

Fig. 23

4 INSTALLATION

MAKE TANK CONNECTION
(see photos 24 to 26)

Remove the tank fitting, remove the electrical connection and the fuel lines from the tank fitting.

Drill an 8 mm Ø hole in the free area of the top part of the tank fitting as shown.

⚠ CAUTION!

Make sure no impurities enter the tank when drilling the tank fitting.

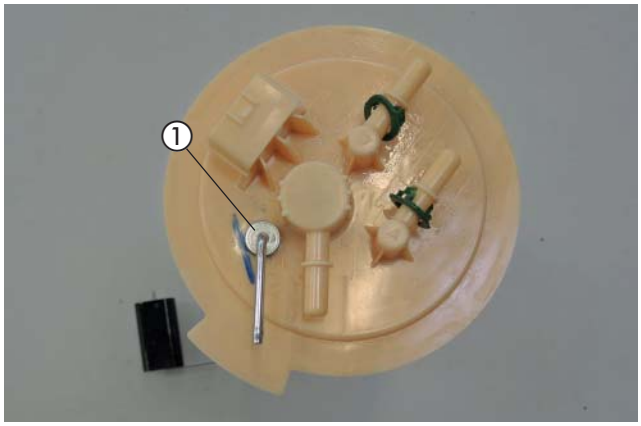

Fig. 24
① Fuel tank extractor mounted

Introduce the prepared tank extractor through the hole and align as shown.

Screw the tank extractor firmly with B8 body washer and M8 nut

⚠ CAUTION!
The tank fitting should not be removed for longer than 10 minutes because of the expansion of the fuel tank!

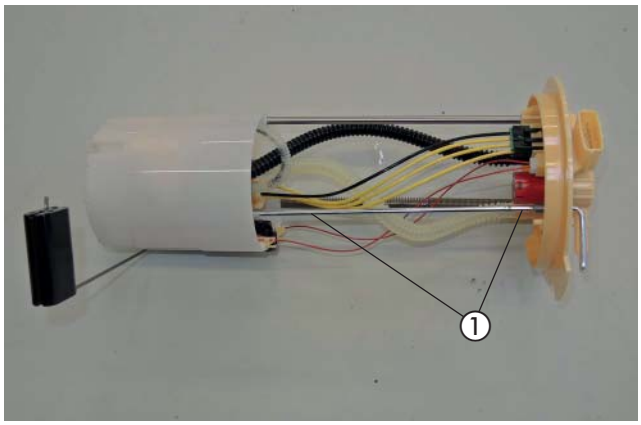

Fig. 25
① Fuel tank extractor mounted

Insert the tank fitting in the tank and fasten with the locking ring, making sure that the seal fits properly.

Connect the fuel pipe (intake line, approx. 1 m) at the intake connection of the fuel tank extractor using the fuel hose (3.5 x 3mm Ø, l = 50 mm).

Install the fuel tank again according to the manufacturer's instructions. Connect the fuel lines and the plug-in connection at the top of the tank fitting.

PLEASE NOTE!
Secure all connection points with clamps.

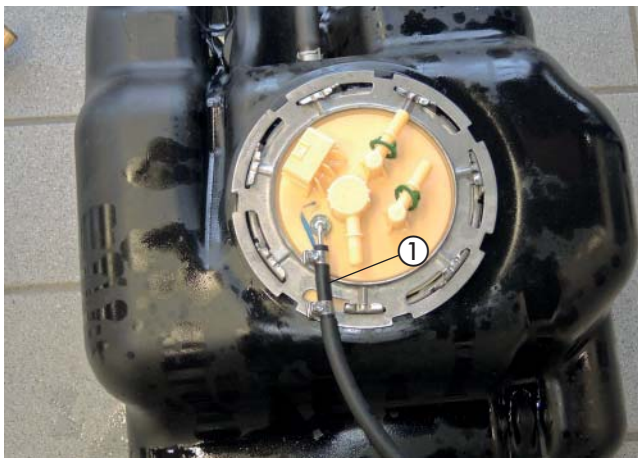

Fig. 26
① Fuel tank extractor connected

4 INSTALLATION

INSTALL AND CONNECT METERING PUMP
(see photos 27 to 28)

Connect the fuel pipe (discharge line) to the heater using a fuel hose (3.5 x 3mm Ø, l = 50 mm).

Lay the fuel pipe together with the metering pump cable from the main cable harness to the left side of the vehicle and on through the engine compartment to the left vehicle underbody.

Lay the fuel pipe together with the metering pump cable at the left vehicle underbody to the installation position of the metering pump (in front of the fuel tank) and fasten with cable ties.

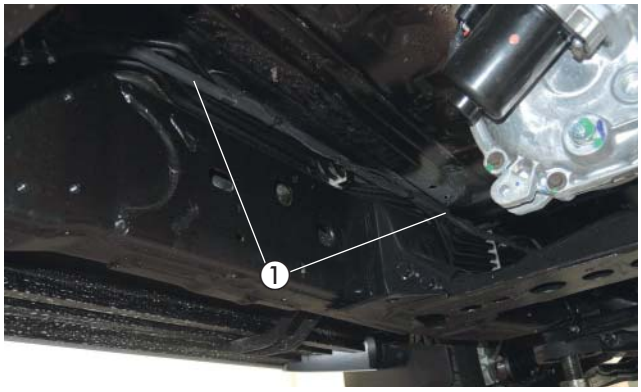

Fig. 27
① Fuel pipe and metering pump cable laid at the vehicle underbody

Screw the prepared metering pump firmly to the existing strap from the crossbeam (in front of the tank) using an M6 x 16 screw.

Ensure it is installed with at least a 15° rising gradient on the pressure side. The discharge end of the metering pump points to the front and the intake end points to the rear.

Route the fuel pipe (intake line) from the tank connection to the metering pump and connect to the intake end of the metering pump using the fuel hose (3.5 x 3mm Ø, l = 50 mm).

Cut the fuel pipe (pressure line) to the required length and connect with the fuel hose (3.5 x 3 mm Ø, l = 50 mm) to the discharge end of the metering pump.

Slot the plug-in contacts of the metering pump cable into the mating connector regardless of polarity. Connect the connector to the metering pump.

⚠ CAUTION!
Secure all hose connections with hose clips.
When laying the fuel lines, ensure that they are at a sufficient distance from hot vehicle and heater parts.

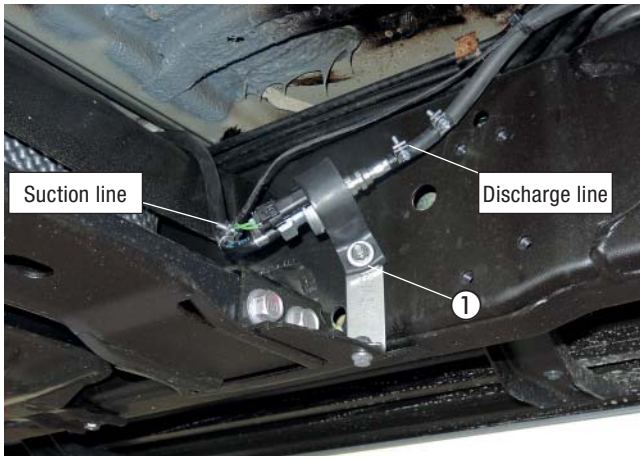

Fig. 28
① Metering pump mounted and fuel pipe connected

4 INSTALLATION

MOUNT FUSE BRACKET
(see photo 29)

Fit the premounted holder with the fuse block to the existing threaded hole on the left side of the front crossbeam behind the headlight.

Connect the main cable harness plugs to the heater.



Fig. 29
① Holder mounted with fuse block

CABLE LAYING
(see photo 30)

Take the vehicle interior cable loom consisting of:
- 4 mm² ws/rt and 0.5 mm² sw/rt cable
- 3-wire control unit cable loom
- 4-pin fan control box cable loom

through the vehicle cable grommet on the left side of the engine partition next to the brake servo into the vehicle interior.

⚠ CAUTION!
When laying the cable looms, ensure they are at an adequate distance from hot vehicle and heater parts.
Use cable ties to fix the cable looms in suitable places.

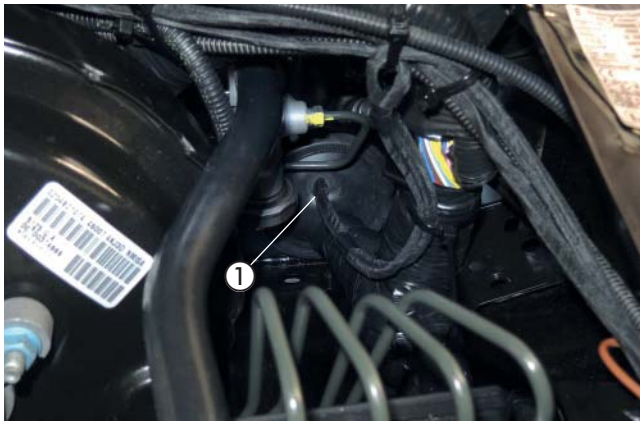

Fig. 30
① Vehicle's cable grommet

4 INSTALLATION

POWER SUPPLY
(see photo 31)

Lay the 4 mm² rt positive cable up to the positive connection terminal of the battery and connect with the A6 cable lug.



Fig. 31
① Plus cable connected

The earth point for the connecting of the negative cable is located "hidden" under the left side panel next to the ABS block in the area marked in the illustration.

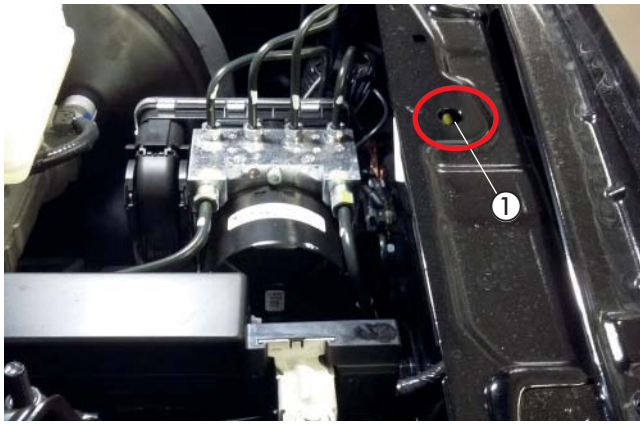

Fig. 32
① Earth point on the side wall next to the ABS block

Lay the 2.5 mm² br negative cable to the earth point next to the ABS block and connect with the A6 cable lug.

⚠ CAUTION!
When laying the cable looms, ensure they are at an adequate distance from hot vehicle and heater parts. Use cable ties to fix the cable looms in suitable places.

To continue installation, remove the fuses in the fuse block.

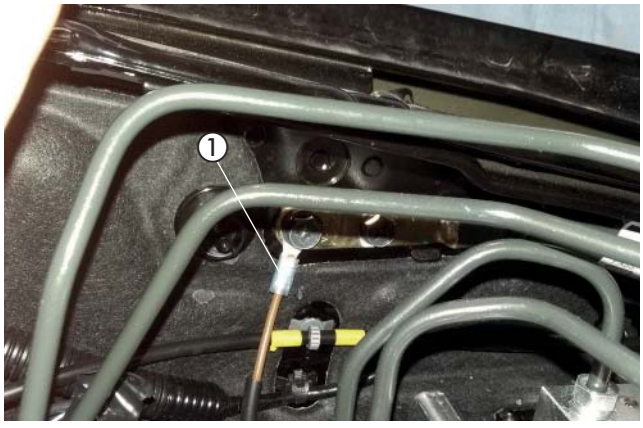

Fig. 33
① Earth cable connected

4 INSTALLATION

FAN CONTROL (AUTOMATIC AIRCON AND AIR-CONDITIONING SYSTEM)
(see photos 34 to 39)

Mount the prepared relay blocks for the fan relay and EasyFan relay to the existing hole in the strut above the glove compartment, using a tapping screw (5.5 mm).

Fasten contacts to the 4 mm² ws/rt and 0.5 mm² sw/rt cables, lay to the relay block for the fan relay and slot into the relay block as shown in the circuit diagram.

Mount the earth cables of both relay blocks to the existing M6 screw on the strut.
Insert the fan relay and the EasyFan relay in the respective block.

From the EasyFan relay lead harness,
– take the white cable to the driver's footwell.
– take the black and black-and-white cables to the aircon amplifiers (behind the aircon control).

Take a 5A vehicle fuse (terminal 30, +12V) out of the central fuse box and insert the fuse pick-up.

Disconnect the two yellow cables in chamber 3A and 8A of connector M34 and insert the 4 mm² sw and 4 mm² sw/vi cables with two butt-type connectors (yellow) as shown in the circuit diagram.

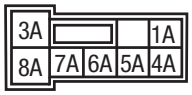

Connector M34, cable side

Mount the prepared holder with the EasyFan fan control box/stationary part of the control unit to the left supporting strut below the steering wheel, using an M6 x 12 screw in the existing hole.

Insert the white cable from the EasyFan relay lead harness into chamber 4 of the 8-pin connector of the EasyFan lead harness (22.9000.30.0265).

Plug the 4-pin connector from the fan control box cable loom into the fan control box.

Connect the black-and-red cable from the EasyFan lead harness with the 0.5 mm² sw/rt cable from the vehicle interior cable loom using a butt-type connector (red).

Take the twisted cables (2 x 2 x 0.5 mm²) from the EasyFan lead harness to the aircon amplifier (behind the aircon control).



Fig. 34
① Fan relay and EasyFan relay mounted

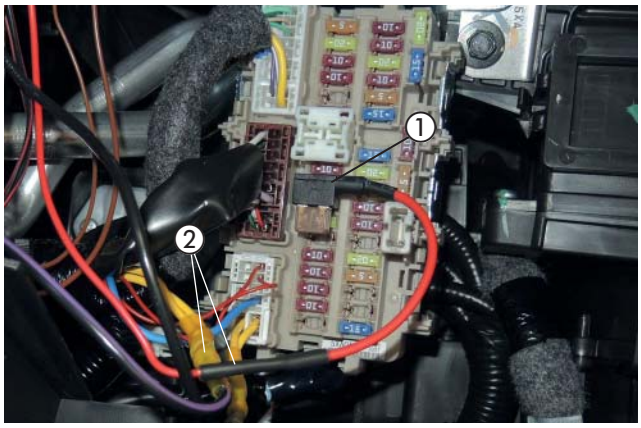

Fig. 35
① 5A fuse pick-up inserted in central fuse box (terminal 30)
② 2x yellow cables disconnected and 4 mm² sw and 4 mm² sw/vi connectors inserted

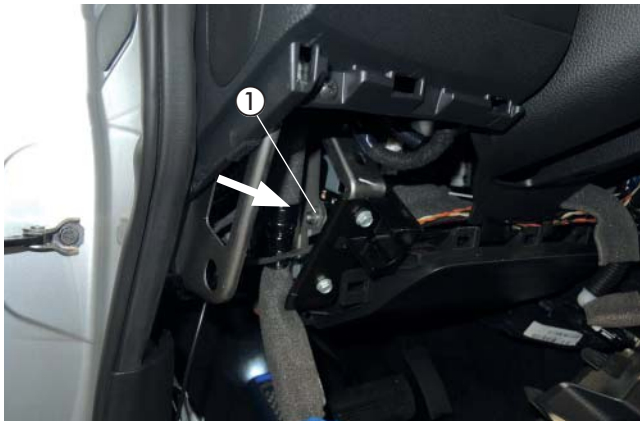

Fig. 36
① Installation position EasyFan fan control box / stationary part of the control unit

4 INSTALLATION

Take the twisted cables (2 x 2 x 0.2 mm²) from the EasyFan lead harness and the 1 mm² sw/ws and 1 mm² sw cables from the EasyFan relay lead harness to the aircon amplifier (behind the aircon control).

Disconnect the M40 connector (white, 40-pin) from the aircon amplifier.

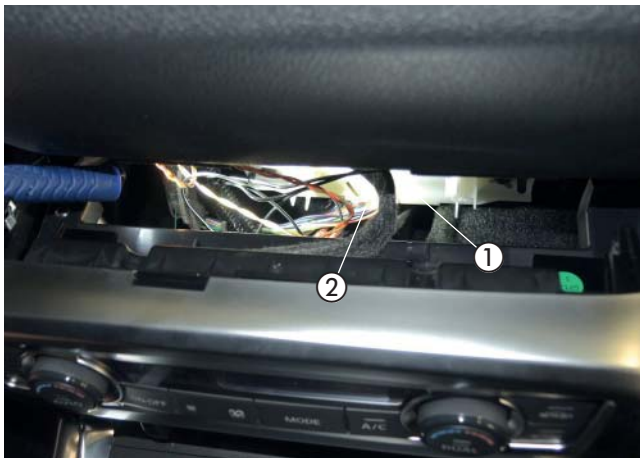

Fig. 37
① Aircon amplifier behind aircon control
② M40 connector of aircon amplifier

Disconnect the green cable (pin 23) from the 40-pin M40 connector and connect the 1 mm² sw/ws and 1 mm² sw cables as shown in the circuit diagram with a butt-type connector (red) in each case.

Insert the CAN leads from the fan control box lead harness in the 40-pin M40 connector with butt-type connectors (red):

- Disconnect CAN-H (blue cable, pin 1)
- Connect yellow cable to aircon amplifier connector
- Connect orange/green cable to vehicle cable harness

- Disconnect CAN-L (pink cable, pin 21)
- Connect white cable to aircon amplifier connector
- Connect orange/brown cable to vehicle cable harness

Connector M40, cable side

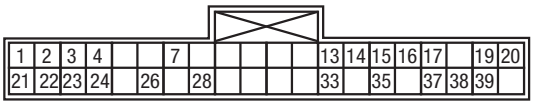

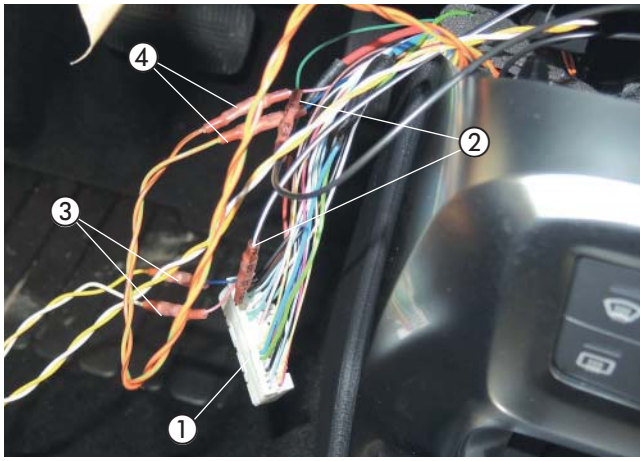

Fig. 38
① M40 connector of aircon amplifier
② Green cable disconnected and sw/ws and sw cables inserted
③ Yellow cable and white cable each connected to aircon amplifier connector
④ Orange/green and orange/brown cables each connected to vehicle

4 INSTALLATION

Circuit diagram

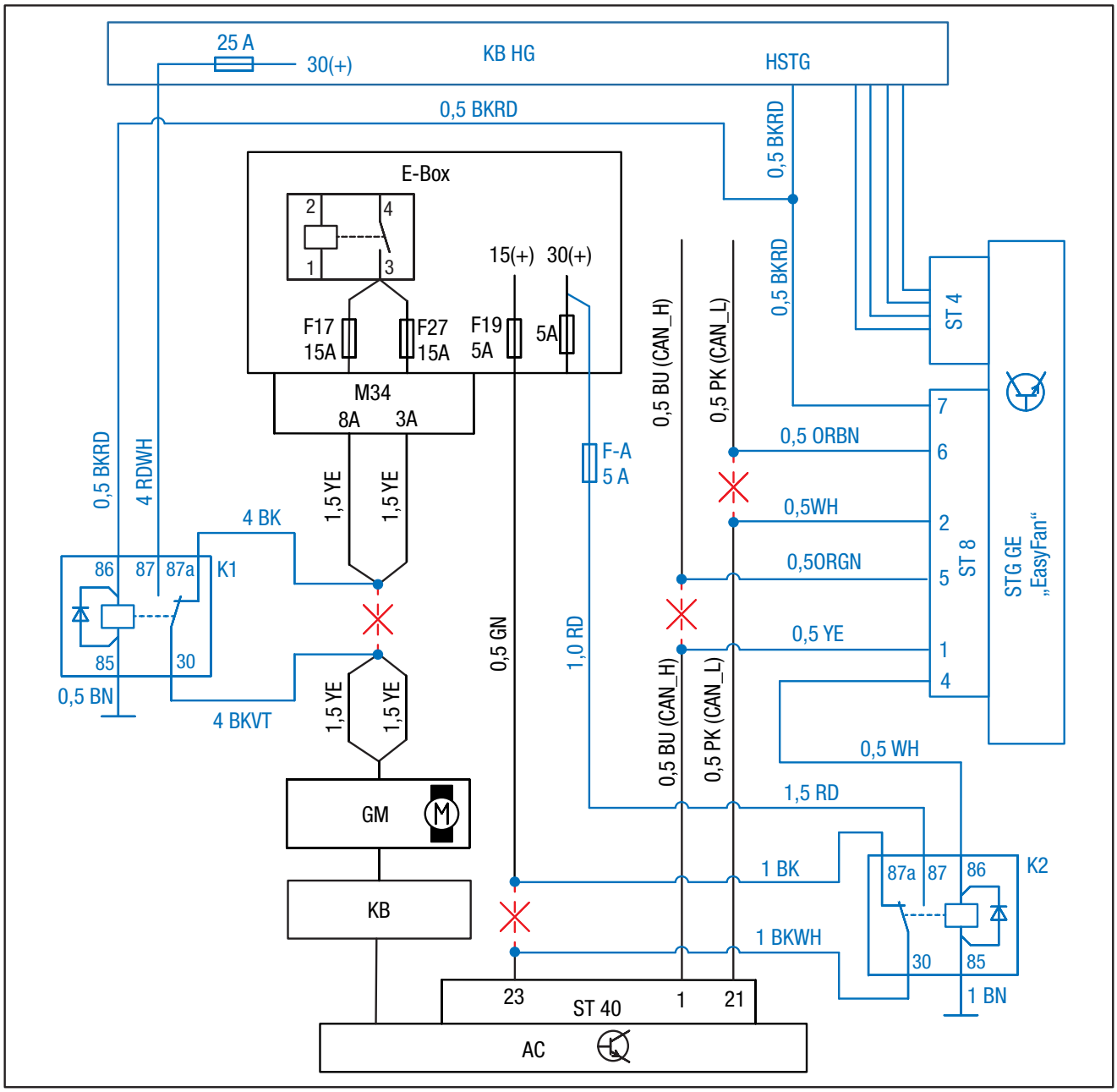

Fig. 39

CABLE COLOURS

RD	red	BU	blue
BK	black	OR	orange
BN	brown	VT	violet
WH	white	YE	yellow
BU	blue	PK	pink
GN	green		

Eberspächer parts

Vehicle parts

CIRCUIT DIAGRAM LEGEND

KB HG	Heater cable harness	STG GE	Fan control box
HSTG	Heater switch output	K1	Fan relay
GM	Fan motor	K2	EasyFan relay
KB	AirCon control unit	ST 8	Connector, 8-pin
AC	Aircon amplifier	ST 4	Connector, 4-pin
E-Box	Electric box with fuses	M40	Connector M40, 40-pin
F-A	Fuse pick-up	M34	Connector M34, 8-pin
●	Butt-type connector		

4 INSTALLATION

INSTALL CONTROL UNIT
(see photos 40 to 42)

The EasyStart Remote/Remote+ is installed according to the Technical Description for the EasyStart Remote/Remote+ Radio Remote Control or Technical Description for the EasyStart Web; refer to the "Installation Instructions" section.

Mount the button for the control unit in the switch unit on the left next to the steering wheel.

To do so, drill a 10 mm Ø hole in a free switch field and insert the button in the hole.



Fig. 40
① Control unit button, mounted

Slot the red, brown and blue-and-white cables (each 0.5 mm²) coming from the control unit cable loom in the connector housing of the control unit.

Take the cables from the fitted button to the stationary part of the control unit and connect.

Mount the prepared holder with the stationary part of the control unit to the left supporting strut below the steering wheel, using an M6 x 12 screw in the existing hole.
For vehicles with automatic aircon or manual aircon type B, the stationary part is fitted together with the EasyFan fan control box.

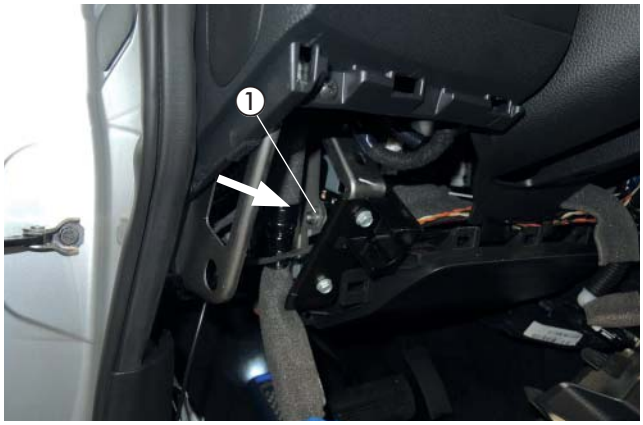

Fig. 41
① Installation position stationary part of the control unit / EasyFan fan control box

ONLY FOR INSTALLATION OF AN EASYSTART REMOTE RADIO REMOTE CONTROL
Connect the antenna cable of the EasyStart Remote / Remote+ radio remote control to the stationary part, take it to the left and lay it in the rubber door seal on the driver's side.

CAUTION!

Use cable ties to fix any excessive length of antenna cable underneath the instrument panel.

OPTIONAL:
Attach the temperature sensor to the lower trim moulding of the A-pillar on the driver's side as shown in the figure.

Take the cables from the fitted temperature sensor to the receiver part and connect.



Fig. 42
① Temperature sensor mounted

5 FOLLOWING INSTALLATION

EXHAUST GROMMET
(see photo 43)

Drill a 38 mm Ø hole on the left side of the front apron cowling as shown and insert an exhaust grommet.

Fit the front apron cowling to the vehicle and take the exhaust pipe end through the grommet.



Fig. 43
① exhaust grommet mounted

FIT DUPLICATE NAMEPLATE
(see photo 44)

Affix the duplicate nameplate to the B-column as shown.



Fig. 44
① duplicate nameplate affixed

ADHERE THE “REFUEL” LABEL
(see photo 45)

Adhere the “Refuel” label inside the fuel tank flap as shown.



Fig. 45
① “Refuel” label

5 FOLLOWING INSTALLATION

COMPLETE THE VEHICLE

- Mount the fuel filter to the engine partition again.
- Install all removed parts in the reverse order.
- Reconnect the battery.
- Check that the hoses, hose clips and pipe clamps as well as all electrical connections are fitted securely.
- Use cable ties to secure all loose cables, lines, etc.
- Restore all the vehicle's programmed settings (radio, window lift, etc.).
- Fill the cooling system, start the engine, vent the cooling system and check for leaks, top up any missing coolant liquid.
- Please also note and follow the vehicle manufacturer's information on filling and venting the cooling system.
- Read and observe all official regulations and safety instructions in the Technical Description.
- Program the control unit and place the operating instructions in the glove compartment.

⚠ CAUTION!
Fill the cooling system only with the coolant liquid specified by the vehicle manufacturer.

STARTING UP THE HEATER

- Switch on the heater at the control unit.
  See Operating Instructions - Control Unit.

6 PARTS OVERVIEW

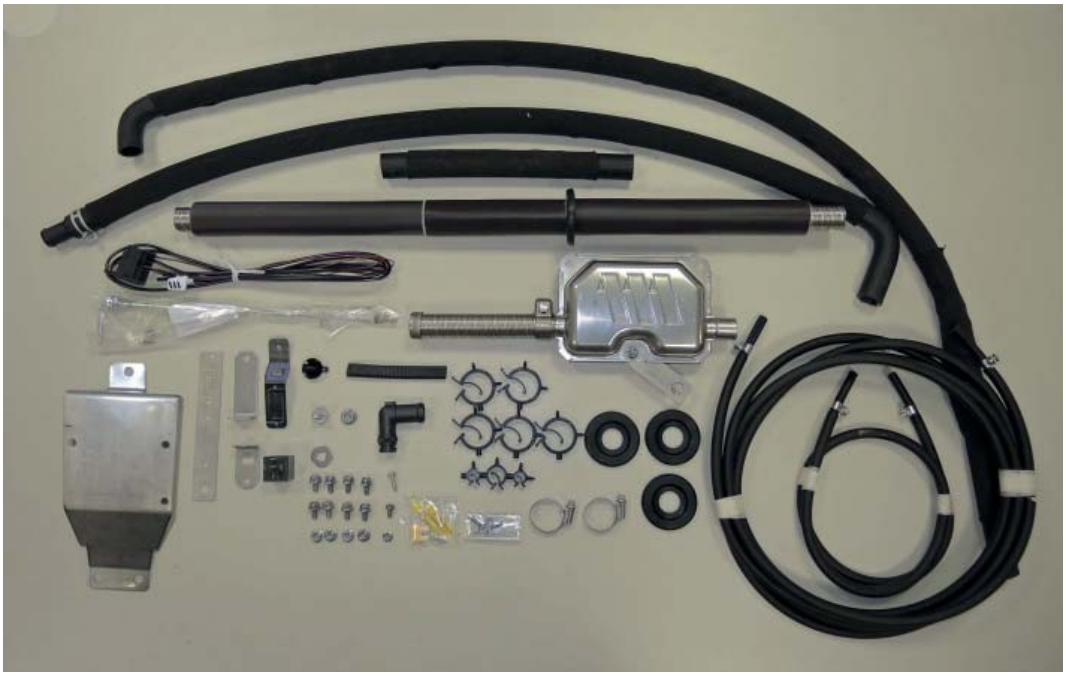



Klimakit



7 INITIAL COMMISSIONING (EASYSTART REMOTE)

CARRY OUT INITIAL COMMISSIONING

For initial commissioning, the following steps must be carried out one after the other.

- **Insert the battery into the mobile unit**
  Insert the battery supplied in the mobile unit, as described in the EasyStart Remote operating instructions, in the "Maintenance / Replacing the Battery" chapter. Do not activate the mobile unit yet.

- **Applying the operating voltage**
  The operating voltage is applied by inserting the fuse into the fuse holder.
  Automatic detection
  Five seconds after applying the operating voltage the button's LED starts to light up. The radio remote control now checks which heater is connected and configures the user prompting of the mobile unit.

- **Teaching the mobile unit**
  If the button's LED starts to flash, the mobile unit can be "teached" (programmed).

Note on the Add teaching mode
The **Add** function can be used to teach up to 4 mobile units to one stationary unit; but only one mobile unit can make contact with the stationary unit

Notes on the AddE teaching mode
The **AddE** is only used to teach the current mobile unit. All previously "teached" mobile units are deleted.

PLEASE NOTE!

If the mobile unit is not teached within 30 seconds, the button's LED indicator goes out.
Press the button until the LED starts to flash. Then teach the mobile unit.

Teach mobile unit - **ADD teach mode**

Press the  button or .

If the connection has been set up between the mobile unit and the stationary unit the LED indicator begins to flicker. The mobile unit is in **Add** teach mode.

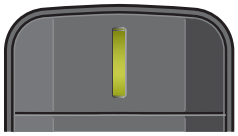

Data transmission
LED: lights up green



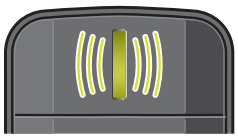

LED: flickers green

Confirm Add teach mode by pressing the  button while the LED indicator is flickering green.

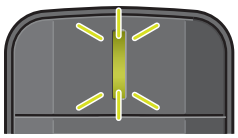

LED: flashes 2x green

The mobile unit
is taught.

7 INITIAL COMMISSIONING (EASYSTART REMOTE)

TEACH MOBILE UNIT - ADDE TEACH MODE

Press the  button or .

If the connection has been set up between the mobile unit and the stationary unit the LED indicator begins to flicker. The mobile unit is in **Add** teach mode.

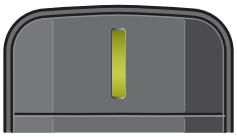

Data transmission
LED: lights up green



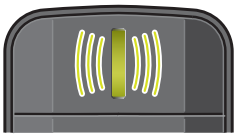

LED: flickers green

Press the  button while the green LED is flickering.



LED: flickers red

Confirm **AddE teach mode** by pressing the  button while the LED indicator is flickering green.

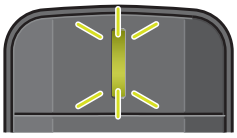

LED: flashes 2x green

The mobile unit is taught.

TEACH AN ADDITIONAL MOBILE UNIT

- Press the button installed in the vehicle until the button's LED starts to flash.
- While the LED in the button is flashing, activate the mobile unit as described under "Teaching the mobile unit".

7 PIN CONFIGURATION (EASYSTART REMOTE)

CONNECTING THE CONNECTOR HOUSING TO THE STATIONARY UNIT

Attach the tab connector to the control unit lead harness.
Clip the control unit lead harness and the button lead harness into 12-pin connector housing. Connector housing pin assignment
Push the contact locking device into the connector housing.
Connect the 12-pin connector housing to the stationary unit.

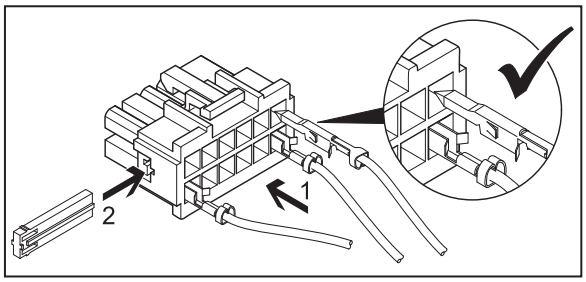

PLEASE NOTE!

- When installing the connector, ensure that the locking tongues always point to the middle of the connector. The tongues only latch into the housing in this position (see diagram).

PIN ASSIGNMENT AT THE STATIONARY UNIT

PIN	SIGNAL	CABLE COLOUR
1	Terminal 30 (plus)	red
2	-	
3	Terminal 31 (plus)	brown
4	JE diagnostics / DAT cable	blue / white / vi
5	-	
6	Button LED (+)	red / yellow
7	Button (+)	brown / yellow
8	Button (-)	brown
9	-	
10	-	
11	-	
12	-	

Connector housing chamber assignment -XB12 (assignment seen from the cable inlet side)

7 INITIAL COMMISSIONING (EASYSTART REMOTE+)

CARRY OUT INITIAL COMMISSIONING

For initial commissioning, the following steps must be carried out one after the other.

INSERT THE BATTERY INTO THE MOBILE UNIT.

Insert the battery supplied in the mobile unit, as described in the EasyStart Remote+ operating instructions, in the "Maintenance / Replacing the Battery" chapter. Do not activate the mobile unit yet.

APPLYING THE OPERATING VOLTAGE

The operating voltage is applied by inserting the fuse into the fuse holder.

AUTOMATIC DETECTION

Five seconds after applying the operating voltage the button's LED starts to light up. The radio remote control now checks which heater is connected and configures the user prompting of the mobile unit.

TEACHING THE MOBILE UNIT

If the button's LED starts to flash, the mobile unit can be "teached" (programmed).

NOTE ON THE ADD TEACHING MODE

The **Add** function can be used to teach up to 4 mobile units to one stationary unit; but only one mobile unit can make contact with the stationary unit

Notes on the AddE teaching mode

The **AddE** is only used to teach the current mobile unit. All previously "teached" mobile units are deleted.

PLEASE NOTE!

If the mobile unit is not teached within 30 seconds, the button's LED indicator goes out.
Press the button until the LED starts to flash. Then teach the mobile unit.

TEACH MOBILE UNIT - ADD TEACH MODE

Press the  or  button, Add is displayed.



Confirm Add teach mode by pressing the  button.

Teach mobile unit - AddE teach mode
Use the  or  button to select **AddE**.



Confirm AddE teach mode with the  button.

7 INITIAL COMMISSIONING (EASYSTART REMOTE+)

AFTER CONFIRMING ADD OR ADDE

SET THE TIME
Use the ◄ or ► button to set the hours

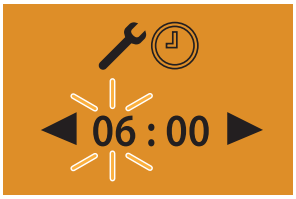

Press the ▭ button to confirm the setting

Use the ◄ or ► button to set the minutes



- Press the ▭ button to confirm the setting
- Set the weekday
  Use the ◄ or ► button to set the weekday

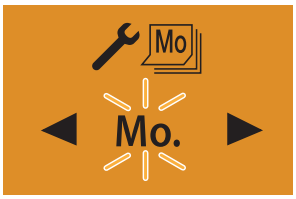

Press the ▭ button to confirm the setting. Then configure the EasyStart Remote+.

Teach an additional mobile unit

Press the button installed in the vehicle until the button's LED starts to flash.
Press the ▭ or ▭ button on the mobile unit, Add is displayed.

Confirm teach mode with the ▭ button.



The additional mobile unit is teached.

CONFIGURE EASYSTART REMOTE+

The system must be configured according to its use.

7 PIN CONFIGURATION (EASYSTART REMOTE+)

CONNECTING THE CONNECTOR HOUSING TO THE STATIONARY UNIT

Attach the tab connector to the control unit lead harness.
Clip the control unit lead harness and the button lead harness into 12-pin connector housing.
Connector housing pin assignment
Push the contact locking device into the connector housing.
Connect the 12-pin connector housing to the stationary unit.

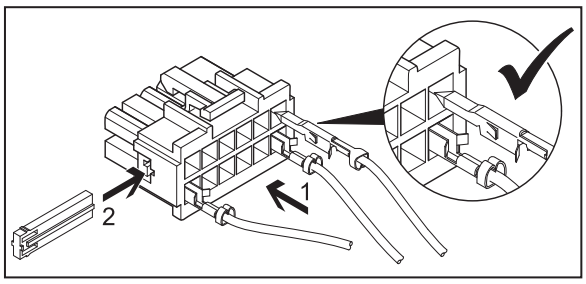

PLEASE NOTE!

- When installing the connector, ensure that the locking tongues always point to the middle of the connector. The tongues only latch into the housing in this position (see diagram).

PIN ASSIGNMENT AT THE STATIONARY UNIT

PIN	SIGNAL	CABLE COLOUR
1	Terminal 30 (plus)	red
2	-	
3	Terminal 31 (plus)	brown
4	JE diagnostics / DAT cable	blue / white / vi
5	-	
6	Button LED (+)	red / yellow
7	Button (+)	brown / yellow
8	Button (-)	brown
9	-	
10	-	
11	-	
12	-	

Connector housing chamber assignment -XB12 (assignment seen from the cable inlet side)

7 INITIAL COMMISSIONING (EASYSTART WEB)

The web-based EasyStart Web operating software can be used to operate an Eberspächer air or water heater via the installed receiver unit.
The installation workshop or garage must log into the EasyStart Web portal to start up the operating software.

The initial startup of the EasyStart Web operating software can only be carried out by the installation workshop using a PC / tablet with an internet connection.
To access the "EasyStart Web portal", open the Eberspächer Partner Portal with
If an access to the portal already exists, it is not necessary to enter an email address and password to log in. If no access exists yet, follow the login instructions.

If the access is successful the main window of the partner portal appears. Click the "EasyStart Web" button under the "Customer Area" menu item.

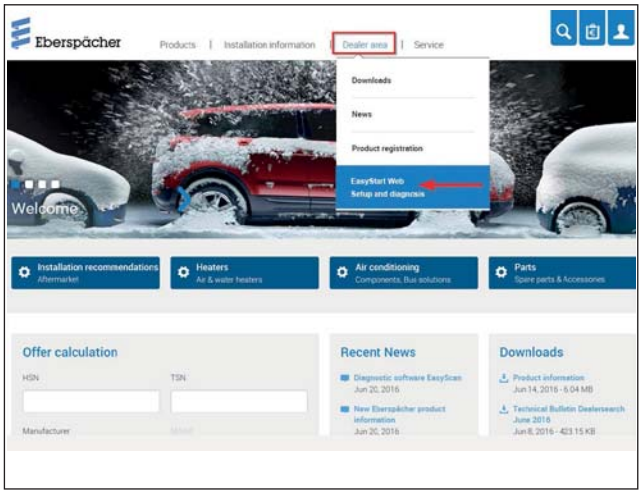

Click here on the link to the B2B portal of EasyStart Web.

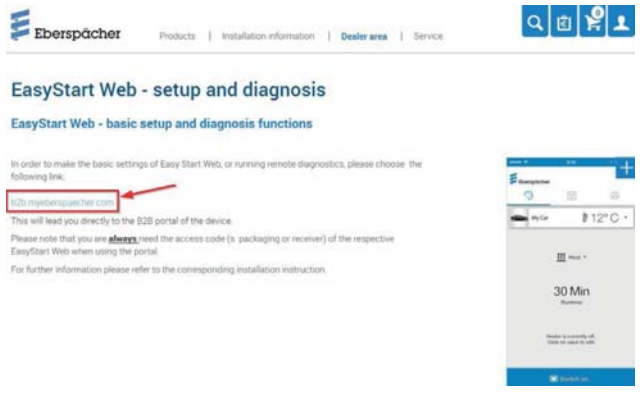

Select the "Initial startup" menu item".



Enter the approval code (IMEI) for EasyStart Web.

PLEASE NOTE!

- The approval code (IMEI) is printed on the EasyStart Web packaging box and I also enclosed in the packaging as a sticker.

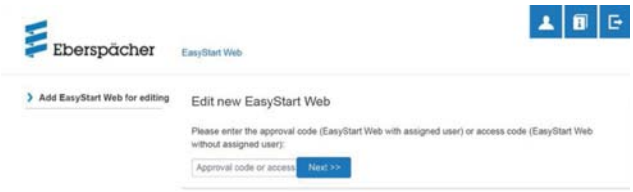

DEFAULT SETTINGS FOR THE CUSTOMER

Configure EasyStart Web as requested by the customer or as necessary for installation.

PLEASE NOTE!

This step is only possible if the EasyStart Web registered on the server beforehand (logged into a GSM network).

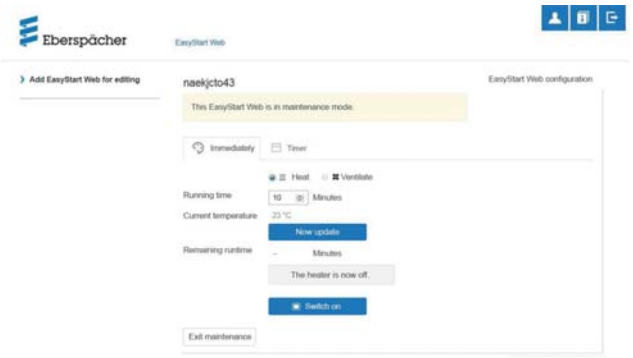

7 INITIAL COMMISSIONING (EASYSTART WEB)

Configuring EasyStart Web

The following functions can be selected

- **EasyStart Web system parameters**
  - Display of the current configuration and properties of the activated EasyStart Web.
- **Connectivity**
  - EasyStart Web can be reached / cannot be reached via the app.
- **Heater fault memory**
  - Read out and delete heater's fault memory.
- **EasyStart Web fault memory**
  - Display EasyStart Web fault memory.

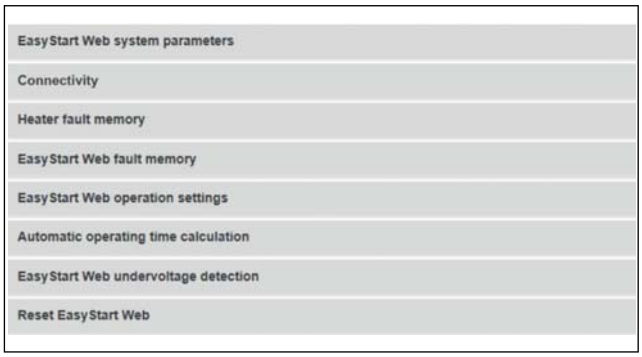

- EasyStart Web operation settings
  - Running time limit of the heater
  - Programming the preset time
  - Configuration of the control unit
  - Temperature unit setting (°C / °F)

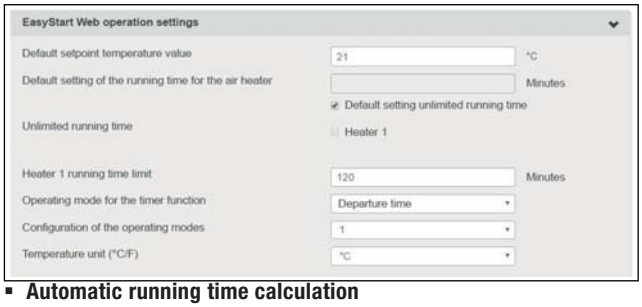

- **Automatic running time calculation**



- EasyStart Web undervoltage detection
  - See PLUS installation instructions
- Resetting EasyStart Web
  - Reset to as-delivered condition (factory settings).

Click the Änderungen an Konfiguration speichern or Formular zurücksetzen buttons to then save or discard the configuration.
After ending the configuration, perform a test run in "Immediate operation" mode.
Click Einschalten to start the test mode.

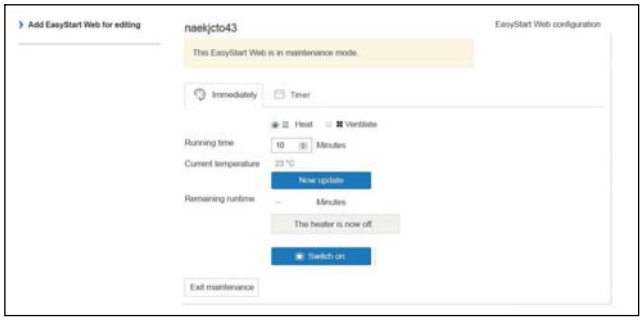

Following the run through test operation is ended. To do this, select the Wartung beenden button and then confirm the message.



Initial commissioning is completed.

When handing over the vehicle to the customer give them the packaging box and quick start guide with the access code (IMEI).

PLEASE NOTE!

Automatic runtime calculation is not possible for air heaters.
The engine size entered can be increased by 500 cm³ for a larger heat requirement. If the combination valve 25 2014 80 62 6200 or 25 2014 80 7200 00 is used in the water circuit, the stated engine size can be reduced by 500 cm³. The values for increasing or reducing the stated engine size are only valid for cooling water circuits where the cooling water flows through the vehicle engine. If the vehicle is only used for short trips, consult the customer and reduce the maximum runtime.

7 PIN CONFIGURATION (EASYSTART WEB)

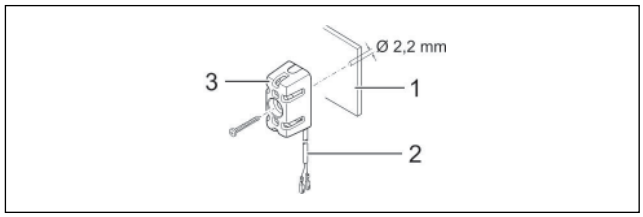

1 Instrument panel
2 Lead harness
3 Temperature sensor

- Snap the "Temperature sensor cable loom" cables into the 2-pin connector (small parts bag" as shown.
- Plug the connector into the 2-pin slot (2nd from left) of the stationary unit.

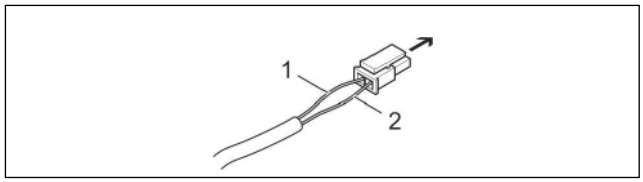

➔ EasyStart Web receiver unit, 2-pin slot
1 BNHW cable
2 GY cable

Connect the communication and power supply cables

Check whether the receptacles are fitted to the RD, BN and BUWH cables in the "Operation" lead harness of the heater cable loom.
If receptacles are missing on the corresponding cables, crimp on the receptacles from the small parts bag in the scope of supply.
Snap the cables into the 5-pin receptacle housing as follows.

- RD cable in chamber 1
- BN cable in chamber 3
- BUWH cable in chamber 4

Connect the 5-pin receptacle housing of the "Operation" lead harness to the 5-pin "cable loom" connector.
For air heaters, connect and insulate the GYRD cable to the BNWH also.
Insulate unused cables.

Connect the two 4-pin connectors of the "cable loom" in the corresponding slots of the EasyStart Web receiver unit (flat 4-pin –> far left, square 4-pin –> far right)

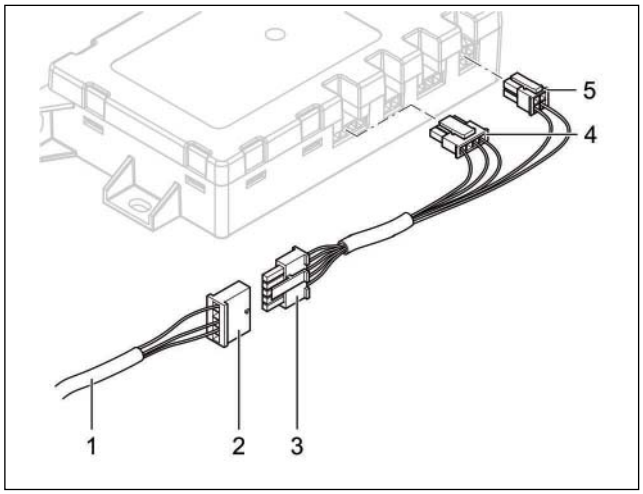

1 "Operation" lead harness
2 Receptacle housing, 5 pin
3 "Cable loom" connector, 5 pin
4 Flat (tab) connector, 4 pin
5 Square connector, 4 pin

CABLE COLOURS

RD	red	GY	grey	BK	black
BU	blue	YE	yellow	GN	green
WH	white	VT	violet	BN	brown
OR	orange				

Connecting the power supply
After installing the heater and EasyStart Web receiver unit, push in the fuse to establish the power supply for both units.

Automatic detection
After applying the operating voltage the button's LED starts to light up.
EasyStart Web checks which heater is connected and configures the system accordingly.
Start the initial startup and configuration of EasyStart Web when the LED in the button is no longer flashing.

LEAFLET FOR THE CUSTOMER

FOR VEHICLES WITH AUTOMATIC AIRCON AND MANUAL AIRCON TYPE B (FULLY ELECTRIC)
- No preliminary adjustments necessary to the aircon control

Description of functions fan control box

The fan control box is activated when the pre-heater mode begins. The vehicle fan motor is automatically switched on, the temperature setting is adjusted to “warm” and the air duct flaps are set to “Defrost (Def)”.

When the vehicle is unlocked during pre-heater mode, the fan control is already disabled by the pre-heater.
The original functionalities are available when the ignition is switched on.
After locking the vehicle, it takes a few minutes for the pre-heater to activate the fan control box.

If the vehicle starts up during the pre-heater mode, control is handed over by the fan control box to the aircon control, the air-conditioning settings return to the original settings and can be adjusted to the personal preferences of the vehicle user.

RECOMMENDATION!

- Switch the pre-heater on at least once a month for about 10 minutes, also in the summer months!
  This will ensure that it works properly during the season!
- We recommend adjusting the heating time to the driving time: Driving time > heating time.

DE

ANSCHLUSSKONSTELLATIONEN FÜR HYDRONIC S3 12V CS

DE

Bitte beachten: Nur gültig für folgende Hydronic S3 Ausführungsvarianten **mit CAN-Schnittstelle und S+ Schaltausgang:**

Heizgeräte für Otto-Kraftstoff (Benzin)	**Bestell-Nr.**
B 4 E – 12 V CS	20.2007.05.0000
B 5 E – 12 V CS	20.2008.05.0000
Heizgeräte für Dieselkraftstoff	**Bestell-Nr.**
D 4 E – 12 V CS	25.2933.05.0000
D 5 E – 12 V CS	25.2934.05.0000

1 Anschluss Hydronic S3 12V CS an EasyStart Pro / EasyStart Web in Verbindung mit EasyFan

Anschluss über Y-Kabel (Mat.-Nr. 22.1000.35.2800) und Leiter BKRD an Bedienelement und EasyFan.

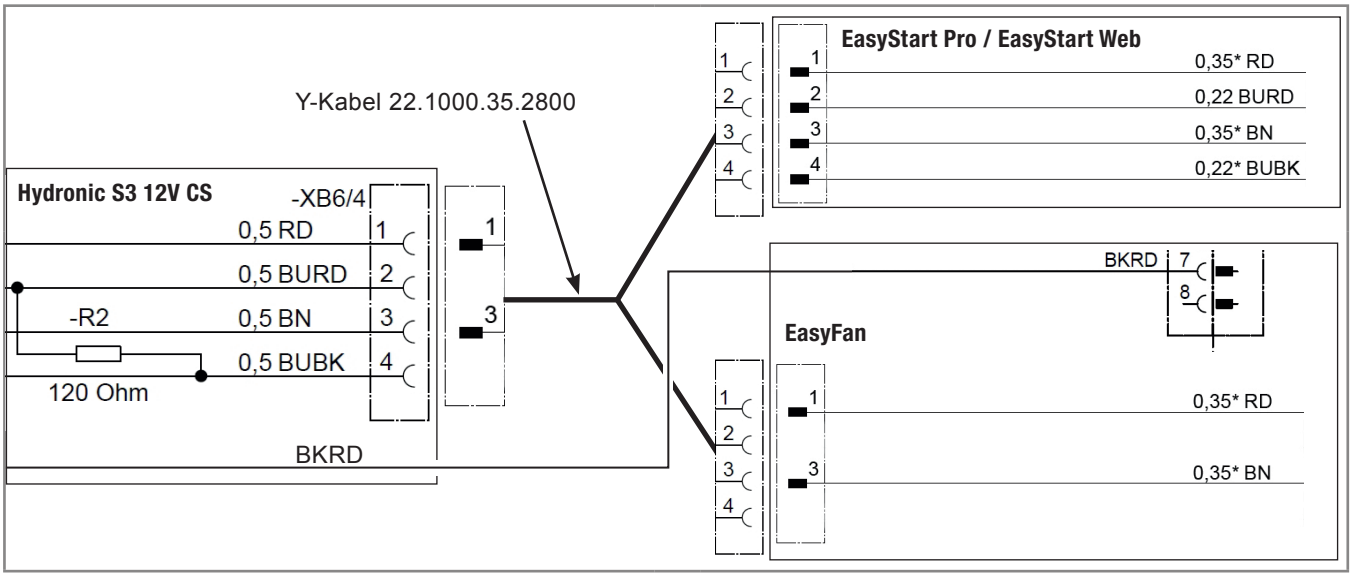

2 Anschluss Hydronic S3 12V CS an 2 x EasyStart Pro / EasyStart Web

Anschluss über Y-Kabel (Mat.-Nr. 22.1000.35.2700) an EasyStart Pro und EasyStart Web.

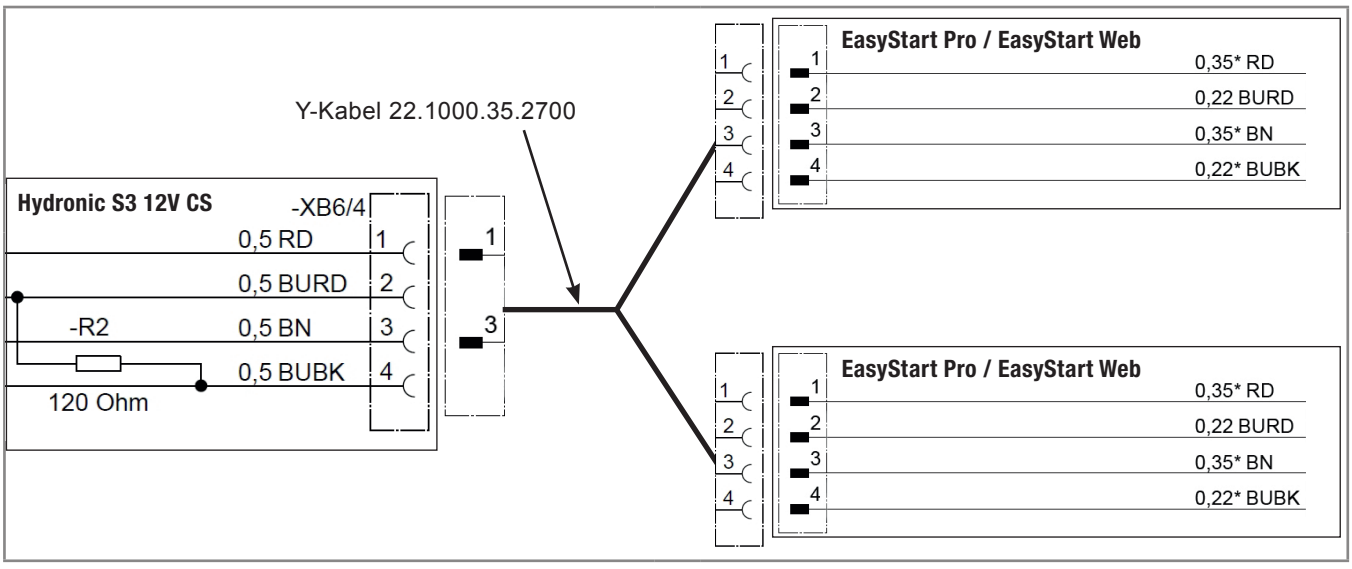

DE

3 Anschluss Hydronic S3 12V CS an EasyStart Remote

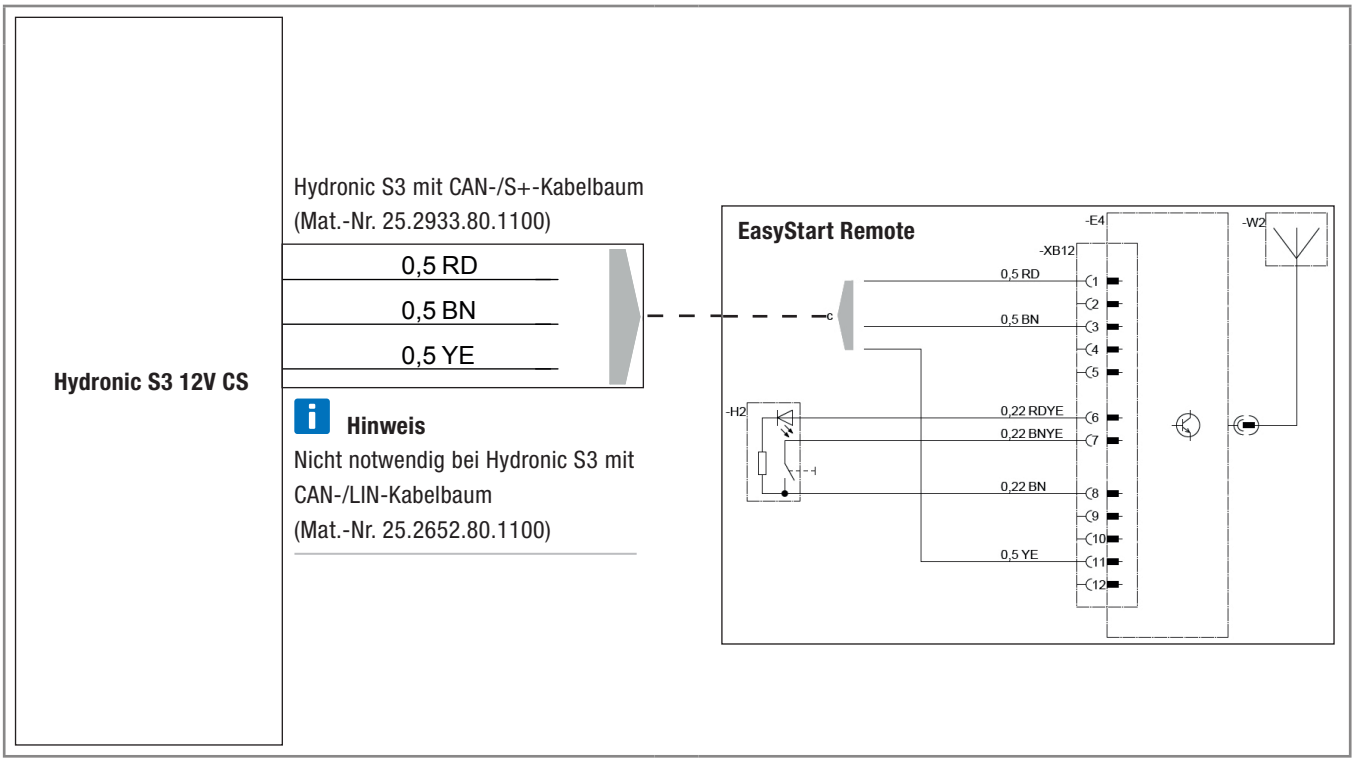

DE

4 Anschluss Hydronic S3 12V CS an EasyStart Remote+

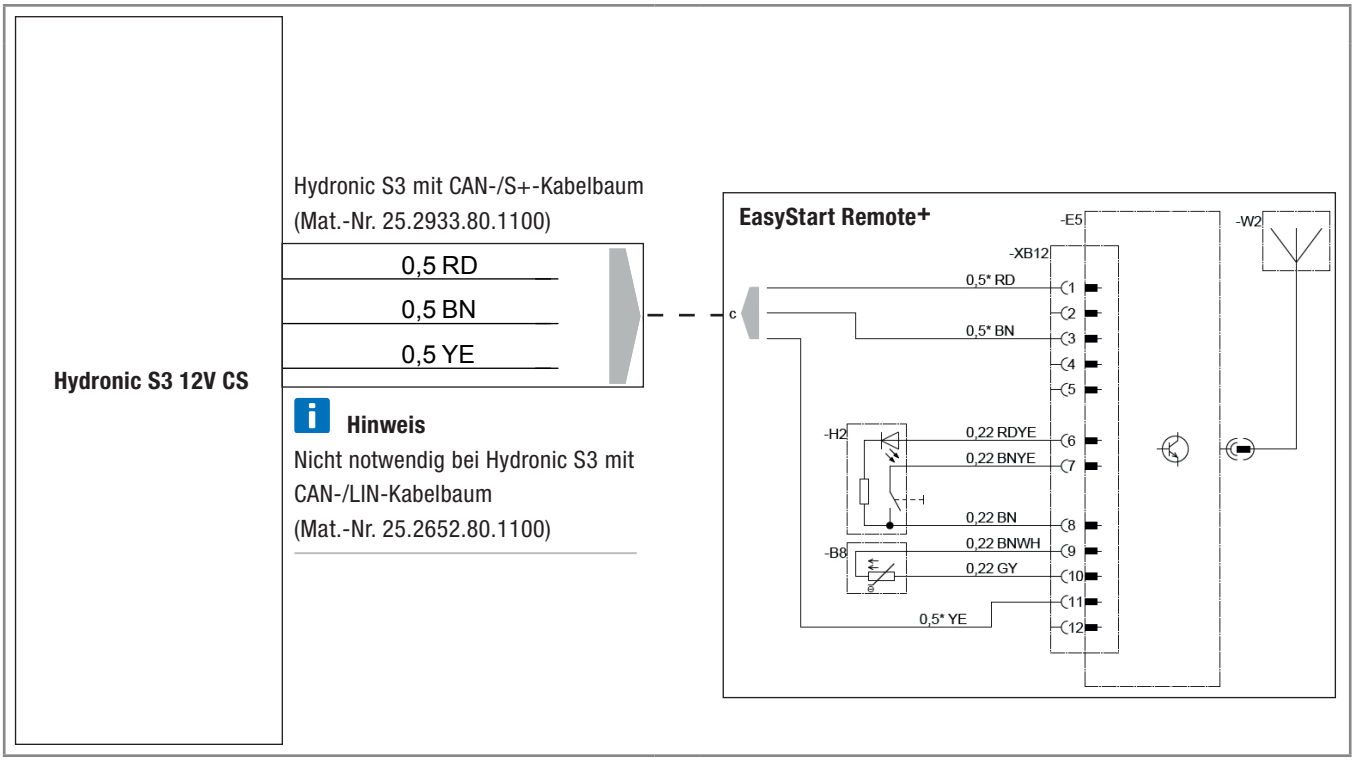

EN

CONNECTION CONSTELLATIONS FOR HYDRONIC S3 12V CS

EN

Please note: Only valid for the following Hydronic S3 versions **with CAN interface and S+ switching output:**

Heaters for petrol	**Order No.**
B 4 E – 12 V CS	20.2007.05.0000
B 5 E – 12 V CS	20.2008.05.0000
Heaters for Diesel	**Order No.**
D 4 E – 12 V CS	25.2933.05.0000
D 5 E – 12 V CS	25.2934.05.0000

1 Connection of Hydronic S3 12V CS to EasyStart Pro / EasyStart Web including EasyFan

Connect via Y cable (Mat.-No. 22.1000.35.2800) and line BKRD to operating element and EasyFan.

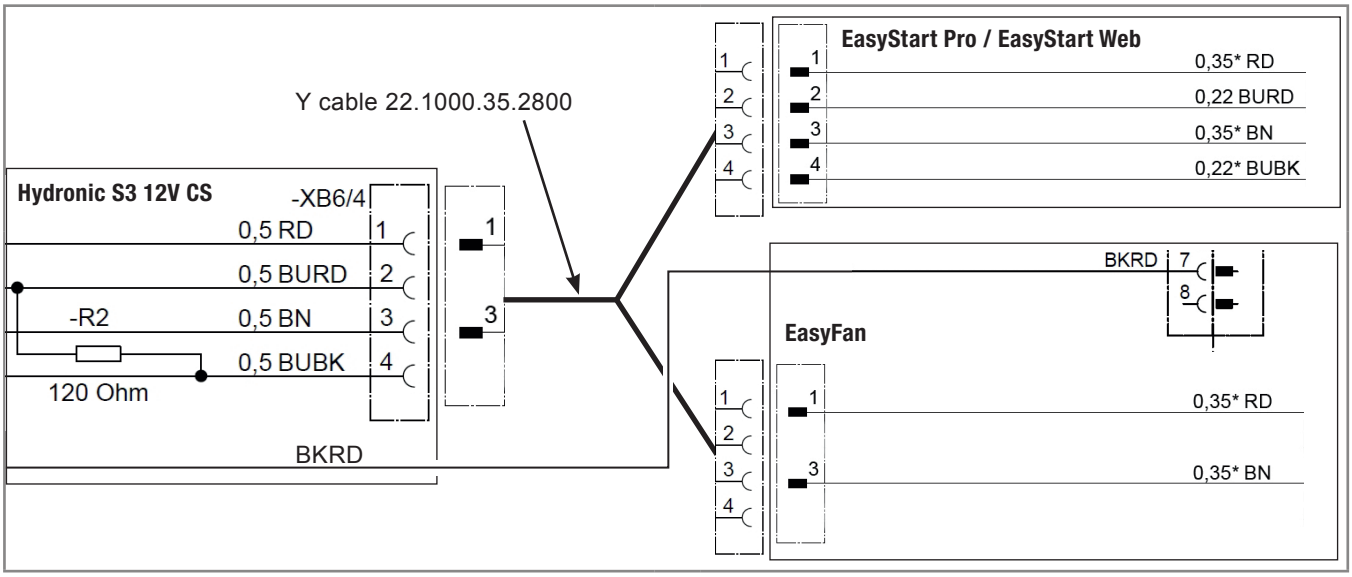

2 Connection of Hydronic S3 12V CS to 2 x EasyStart Pro / EasyStart Web

Connect via Y cable (Mat.-No. 22.1000.35.2700) to EasyStart Pro and EasyStart Web.

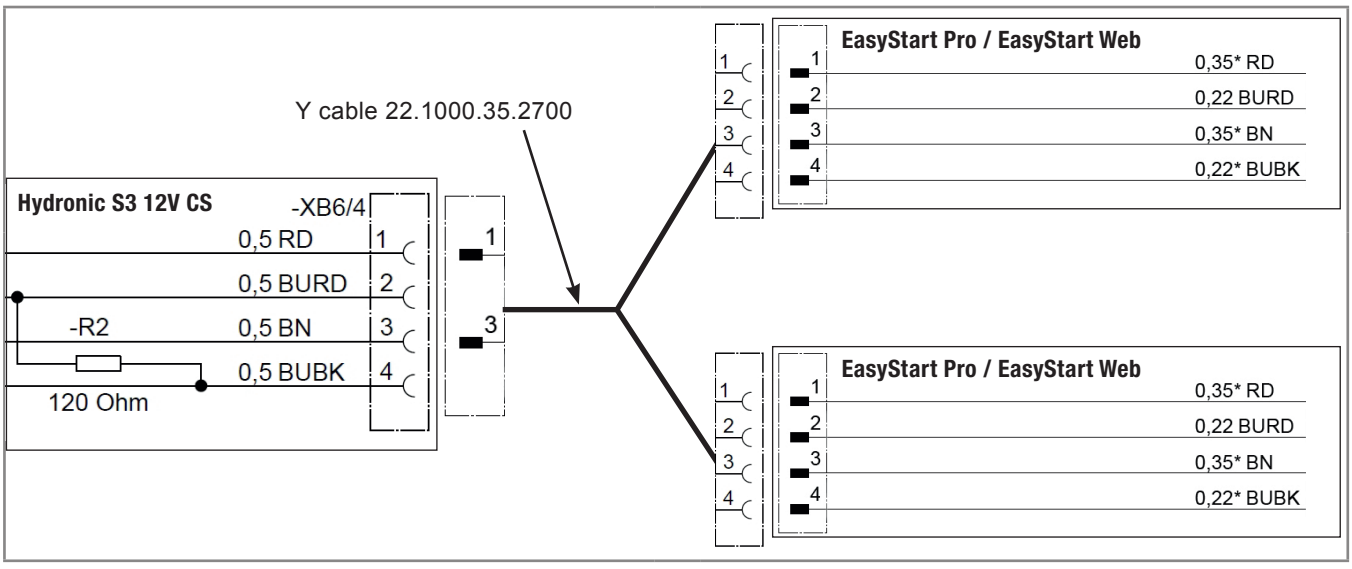

EN

3 Connection of Hydronic S3 12V CS to EasyStart Remote

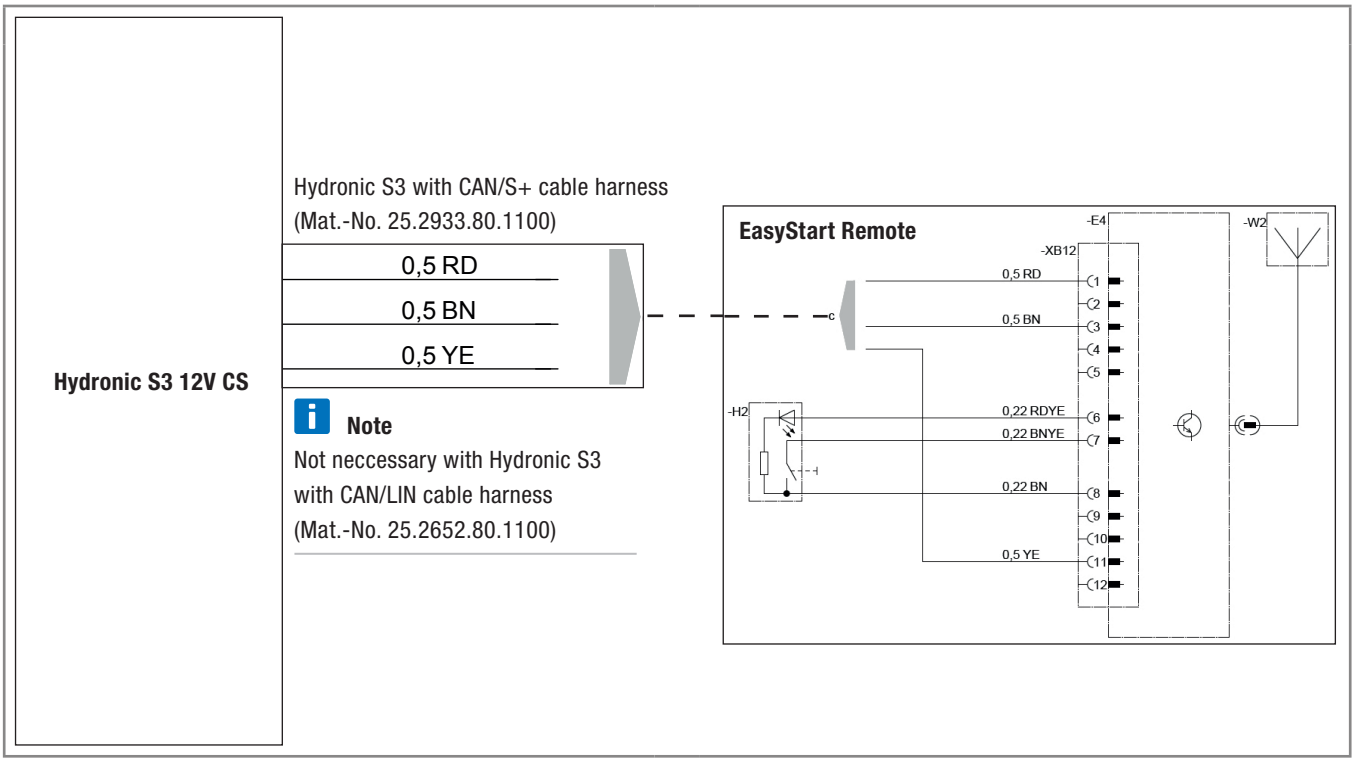

4 Connection of Hydronic S3 12V CS to EasyStart Remote+

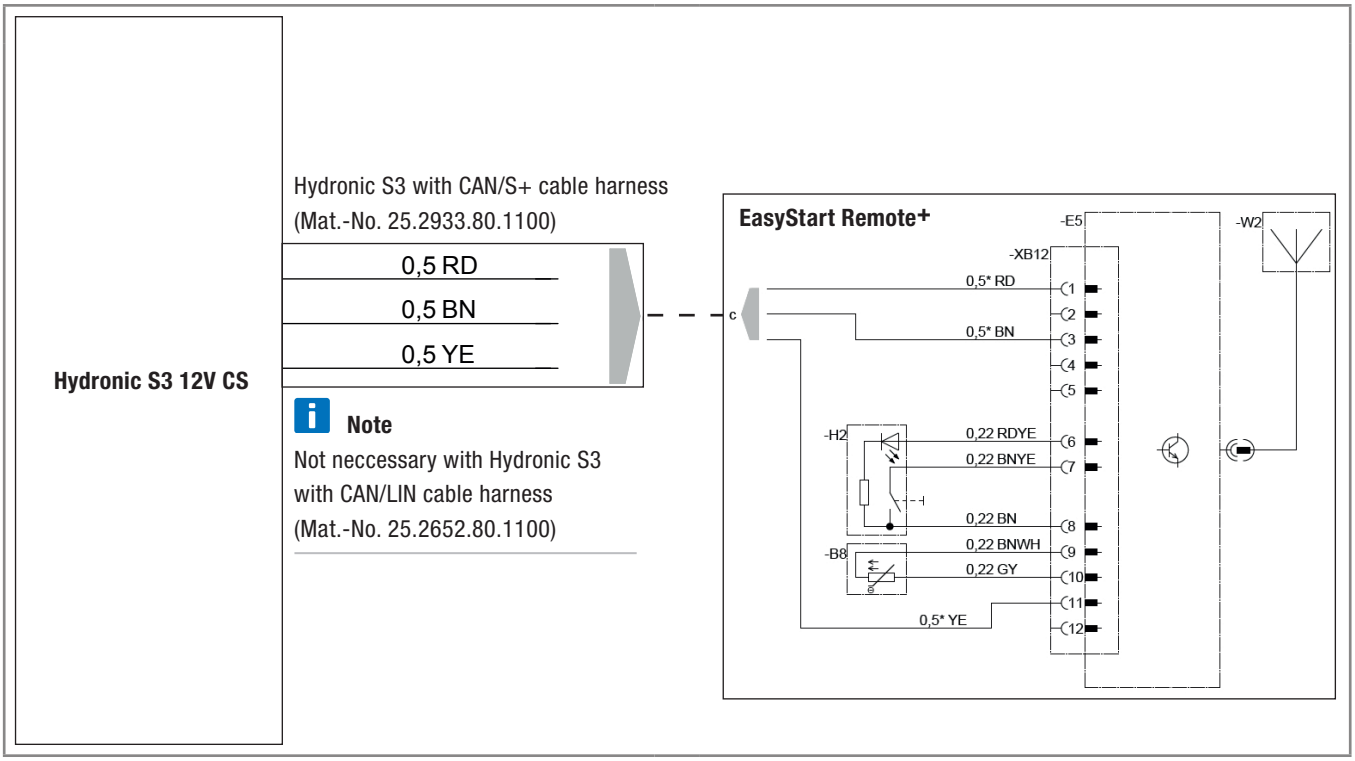

Headquarters:
Eberspächer Climate Control Systems GmbH & Co. KG
Eberspächerstraße 24
73730 Esslingen
Hotline: 03976 2350 235
Fax hotline: 01805 262624
Hotline: 0041 313798405
info@eberspaecher.com

Eberspächer

25 2912 95 3093 12.2017 EN 12.2017
We reserve the right to make changes © Eberspächer Climate Control Systems GmbH & Co. KG