J. Eberspächer
GmbH & Co. KG
Eberspächerstr. 24
D - 73730 Esslingen

Service-Hotline
01805 - 26 26 26
Facsimile
01805 - 26 26 24

HYDRONIC B 4 W S in Peugeot 308 (4)

2008 model
with or without manual air-conditioning
or with automatic 2-zone air conditioning
with front fog lamps
with automatic gearbox
- **1.4 l cubic capacity / 4 cylinder in-line engine / 70 kW – 95 HP**
- **1.6 l cubic capacity / 4 cylinder in-line engine / 103 kW – 140 HP**

This installation recommendation is valid for the vehicle described above and is exempt from any liability claims whatsoever. Depending on the version or modifi cation status of the vehicle, differences can result between it and this installation recommendation.
The installer must check this before installation and, if necessary, take into account the differences compared to this installation recommendation.

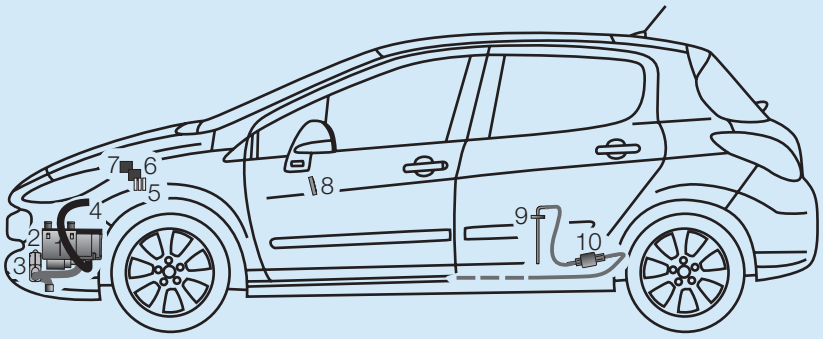

1 *HYDRONIC* B 4 W S
2 Water pump
3 Exhaust pipe with exhaust silencer
4 Combustion air tube
5 Fuse holder
6 Fan relay
7 Relief relay
8 EasyStart T
9 Fuel tank extractor
10 Metering pump

Installation position
The *HYDRONIC* B 4 W S is fi xed, using a bracket, in a horizontal position on the underside of the left-hand side member. The exhaust connection faces downwards, the control box to the rear.

Installation time: approx. 8 h

Contents

		Page
1	Introduction	2
2	Installation - Heater	4
3	Water circuit	7
4	Exhaust and combustion air circuit	9
5	Fuel supply	11
6	Electric	13
7	After installation	20
8	Parts overview	21
9	Leafl et for the customer	22

 © J. Eberspächer GmbH & Co. KG

1 Introduction

Important!
Safety instructions for installation and repair!

Improper installation or repair of Eberspächer heaters can cause a fire or result poisonous exhaust entering the inside of the vehicle.
This can cause serious and even fatal risks.

The heater may only be installed by authorised and trained persons according to the specifi cations in the technical documents and repaired using original- spare parts.
Installation and repairs by unauthorised and untrained persons, repairs using non-original- spare parts and without the technical documents required for installation and repair are dangerous and therefore are not permitted.

Please note!

Installation according to this installation recommendation may only be carried out in conjunction with the respective unit type-related technical description, installation instructions, operating instructions and maintenance instructions.
This document must be carefully read through before / during installation and followed throughout.
Particular attention is to be paid to the safety instructions and the general information.
The relevant rules of sound engineering practice and any information provided by the vehicle manufacturer are to be noted observed during the installation.
Eberspächer does not accept any liability for defects and damage due to installation by unauthorised and untrained persons.

Accident prevention

General accident prevention regulations / health and safety regulations and the corresponding workshop, company and operating safety instructions are to be observed.

Installation recommendation validity

The installation recommendation is valid for the vehicle with the engine and gearbox options listed in the following.

Engine and gearbox options			
Cubic capacity	kW / HP	MKB	Gearbox
1,6 l	103 / 140	FTF	4AT

4AT = 4 speed automatic gearbox

Please note!

The installation recommendation is not valid for right-hand drive vehicles.

Vehicle types, engine types and feature options not listed in this installation recommendation have not been tested.
Installation according to this installation recommendation can, however, be possible.

1 Introduction

Parts required for the installation

Quantity	Designation	Order No.
1	*HYDRONIC* B 4 W S as complete kit	20 1866 05 00 00
1	Vehicle-specific additional parts	24 8311 00 00 00
	In addition, a control is required:	
1	EasyStart T	22 1000 32 88 00
1	Support	22 1000 51 32 00
or		
1	EasyStart R radio remote control	22 1000 32 85 00
or		
1	EasyStart R+ radio remote control	22 1000 32 80 00

In addition, to be ordered from Peugeot:

1	Seal (O-ring) Peugeot Part No.	0000153129

Special tools required

- Torque wrench (5....50 Nm)
- Anti-corrosion agent
- Pliers for spring strip clamps
- Step drill
- Tool for bind rivet nuts
- Drill
- Spanner for union nut of the tank fitting

Tightening torques

If no tightening torques are specifi ed, tighten the screw connections (hexagon screw and hexagon- nut) according to the following table.

Screwed connections	Tightening torques
M6	10 Nm
M8	20 Nm
M10	45 Nm

Fit all screwed connections, except those of the heater itself (M6 x 97), with a circlip (corrugated ring washer) or a split washer.

Preparation at the vehicle

- disconnect the battery
- lift up rear seat bench
- remove the air conditioning control
- remove glove compartment
- remove bottom left-hand steering column trim
- remove battery
- remove battery panelling
- remove intake air pipe
- remove air fi lter housing
- remove E-box cover
- remove bottom engine panel
- remove bottom bumper fascia
- depressurise the cooling system
- drain coolant into clean container

2 Installation - Heater

Install heater
(see Photos 1 to 8 and Sketch 1)

Make the Ø 9 mm holes in the underside of the left-hand side member according to the dimensions shown in the photo. Pull one M6 blind rivet nut into each of the Ø 9 mm holes. Make a further Ø 7 mm hole in the bracket of the ABS control unit with the dimensioning shown in the photo.

please note!

Deburr all finished holes and treat with anti-corrosion agent.

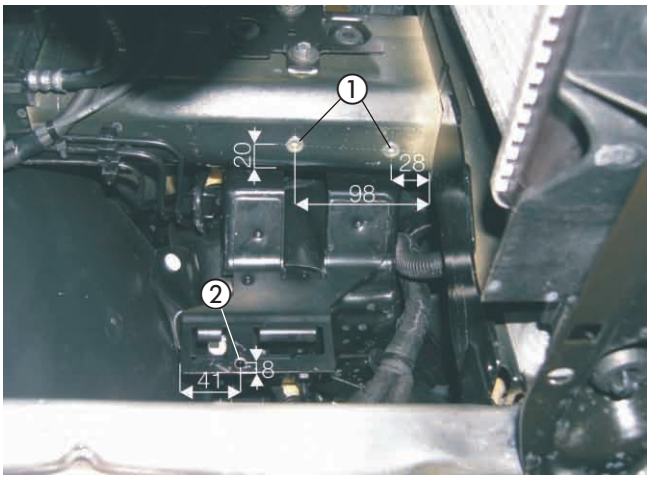

Photo 1

① Ø 9 mm hole with M6 blind rivet nut
② Ø 7 mm drillhole

Adjust the top fixing tab of the unit holder to the heater bracket and install using M6 x 16 screws and M6 nuts as shown in the photo.

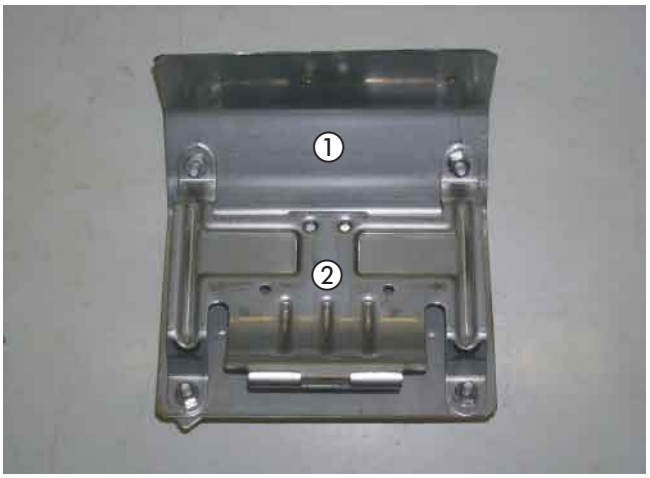

Photo 2

① Heater bracket
② Unit holder installed

Screw the bracket (22 9000 50 61 03) onto the bottom lefthand fixing tab on the rear of the heater bracket as shown in the photo.

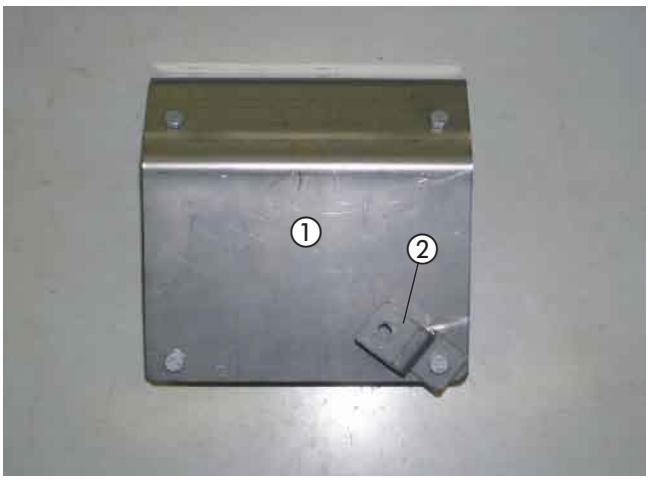

Photo 3

① Heater bracket
② Bracket (22 9000 50 61 03) installed

2 Installation - Heater

Install the heater bracket using M6 x 16 screws and M6 nuts as shown in the photo.

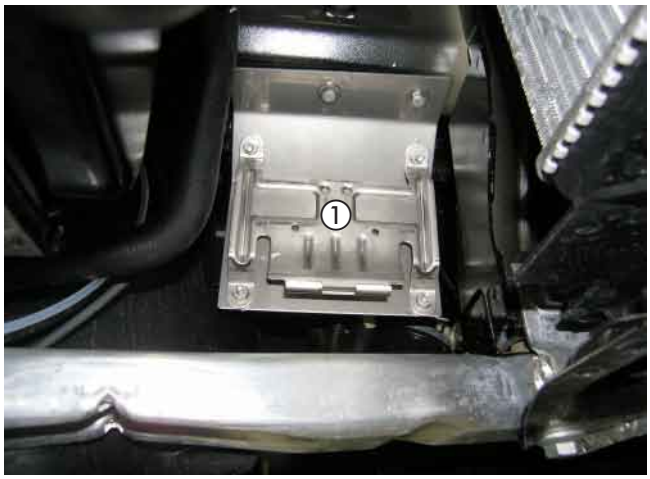

Photo 4

① Heater bracket installed

Install the water pipe sockets of the heater as shown in the photo, see Technical Description, „Installation“ chapter, „Installation of the elbowed water pipe sockets“ section.



Photo 5

① Elbowed water pipe sockets installed

Insert the water pump in the rubber holder.
Mount the rubber holder onto the bracket (22 9000 50 26 03) using M6 x 30 screw, M6 nut and B6 body washer as shown in the photo.

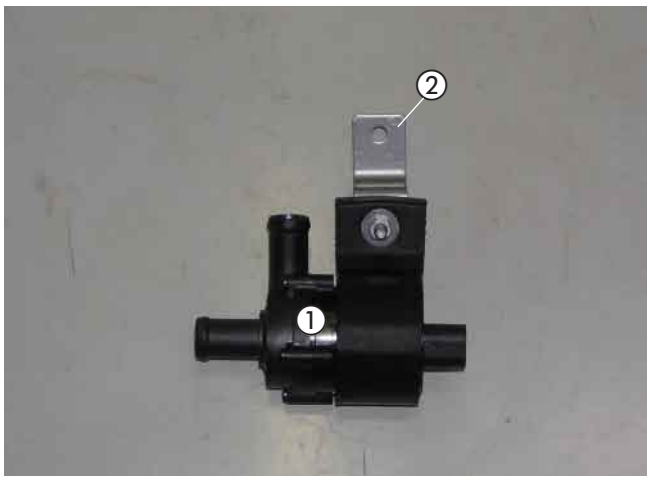

Photo 6

① Water pump
② Bracket (22 9000 50 26 03) installed

2 Installation - Heater

Position the prepared water pump on the heater using fixing screw M6 x 97.

Use Ø 20 – 32 mm hose clips to connect the water hose from the water pump to the heater at the discharge connection of the water pump and at the inlet connection of the heater.

Connect the water hose from the heater to the heat exchanger at the water outlet connection of the heater using Ø 20 – 32 mm hose clip.

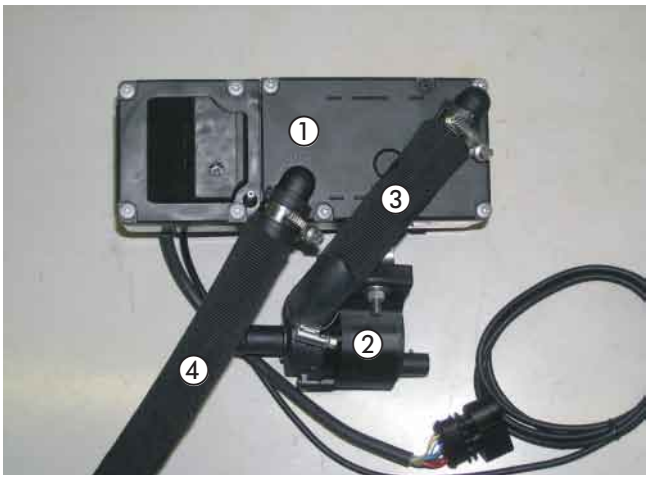

Photo 7

① Heater
② Water pump
③ Water hose from the water pump to the heater
④ Water hose from heater to the heat exchanger

Remove the duplicate rating plate from the heater.
Deface the date Photos which are not applicable so that they are illegible.
Attach the duplicate rating plate in a suitable, clearly visible position in the engine compartment.

Insert the heater in the unit holder and use the M6 x 97 fixing screw with 6+0,5 Nm to screw into the front threaded hole of the unit holder together with the water pump.

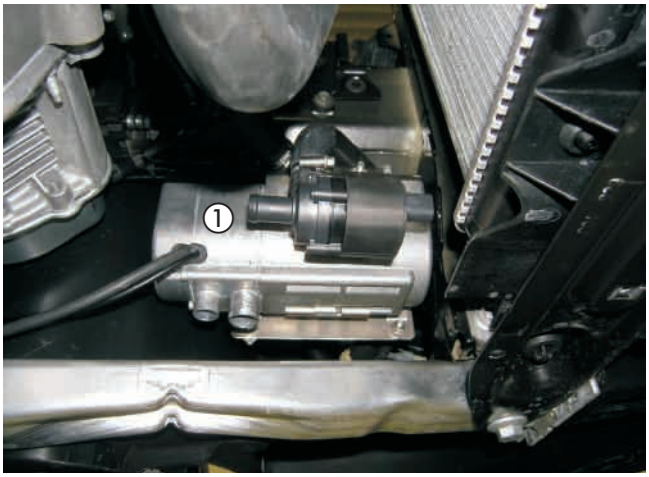

Photo 8

① Heater installed together with water pump

3 Water circuit

Prepare the water hoses
(see Sketch 1)

Cut the water hoses according to the dimensions in the sketch and prepare.

Please note!

The water hoses are connected to the water circuit „inline“, refer to the Technical Description, „Installation“ chapter, „Connection to the Cooling Water Circuit“ section.

Water hose
from the engine to the water pump

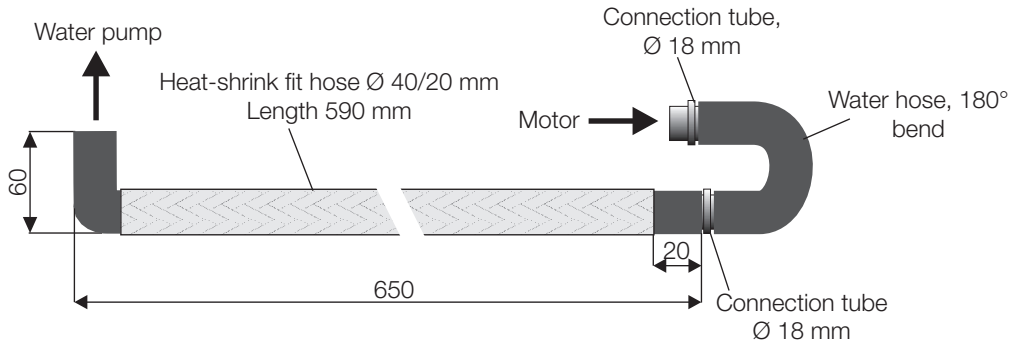

Water hose
from the water pump to the heater

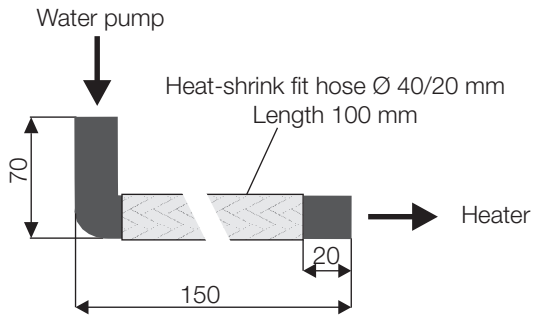

Water hose
from heater to the heat exchanger

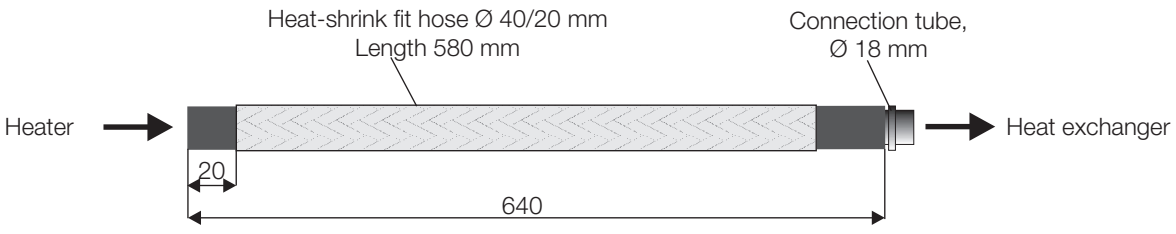

Sketch 1

3 Water circuit

Cut water flow hose
(see Photo 9)

Cut the water flow hose from the engine to the heat exchanger (the bottom water hose at the heat exchanger) just behind the engine connection with the dimensioning shown shown in the photo.

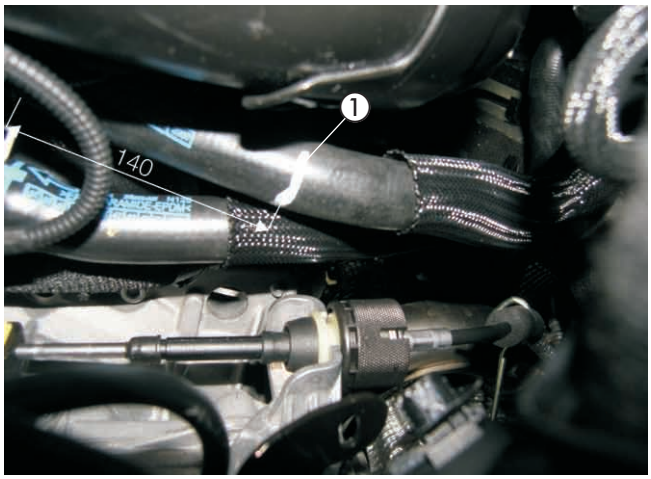

Photo 9

① Cutting point in the water flow hose

Connect and lay water hoses
(see Photos 10 and 11)

Using hose clip Ø 20 – 32 mm to connect the water hose from the engine to the water pump at the water pump intake connection and lay hose up to the cutting point.
Lay the pre-installed water hose from the heater to the heat exchanger up to the cutting point.
Fix both water hoses to each other and to the existing water hose with rotating fi xings using three hose holders.

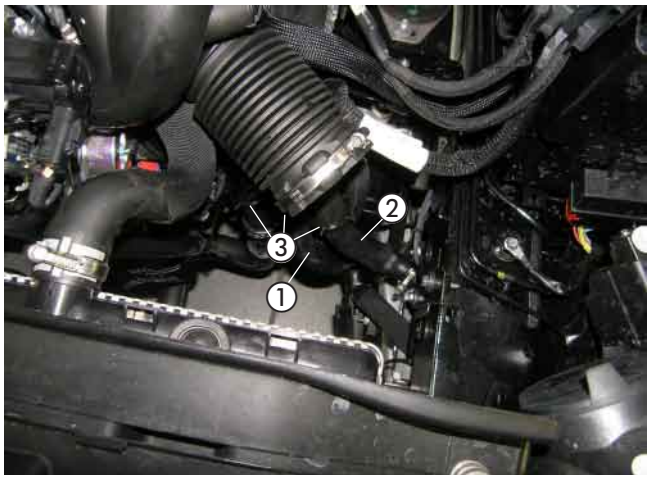

Photo 10

① Water hose from the engine to the water pump
② Water hose from the heater to the heat exchanger
③ Rotatable hose holder

Connect the water hose from the engine to the water pump with the water hose, 180° bend at the hose section of the engine with the connection pipe Ø 18 mm and a hose clip Ø 20 – 32 mm.
The water hose from the heater to the heat exchanger to the hose section of the heat exchanger with connection pipe Ø 18 mm and a hose clip Ø 20 – 32 mm.
Fix both water hoses to each other with rotatable fixings using two hose holders.

Please note!

Secure all hose connections with hose clips.
Protect the water hoses against chafing and use cable ties to secure in suitable positions.



Photo 11

① Water hose from the engine to the water pump
② Water hose from heater to the heat exchanger
③ Rotatable hose holder

4 Abgas- und Verbrennungsluftführung

Abgasschalldämpfer montieren und anschließen
(siehe Bilder 12 bis 16)

Für die Befestigung des Abgasschalldämpfers und des Abgasrohres an der unteren Kühlertraverse zwei Bohrungen Ø 7 mm entsprechend der Bemaßung im Bild fertigen.

Bitte beachten!

Alle gefertigten Bohrungen entgraten und mit Korrosionsschutzmittel behandeln.

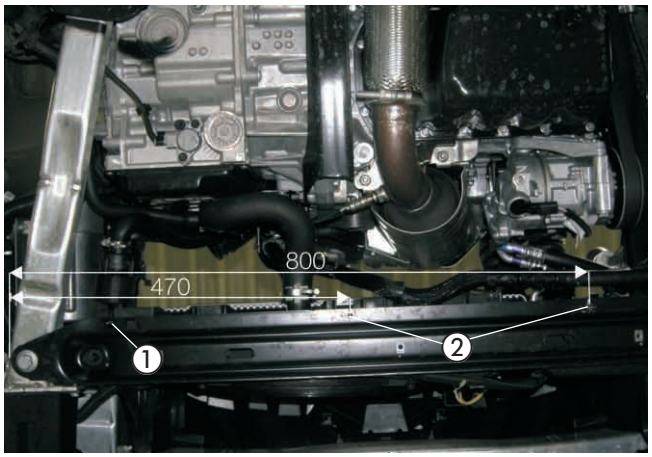

Bild 12

① vorhandene Bohrung Ø 9 mm
② Bohrungen Ø 7 mm gefertigt

Den Halter (9305) entsprechend der Bemaßung im Bild trennen.
Einen halben Halter (9305) am Abgasschalldämpfer mit einer Schraube M6 x 16, einer Mutter M6 und einer Karosseriescheibe B6 montieren.

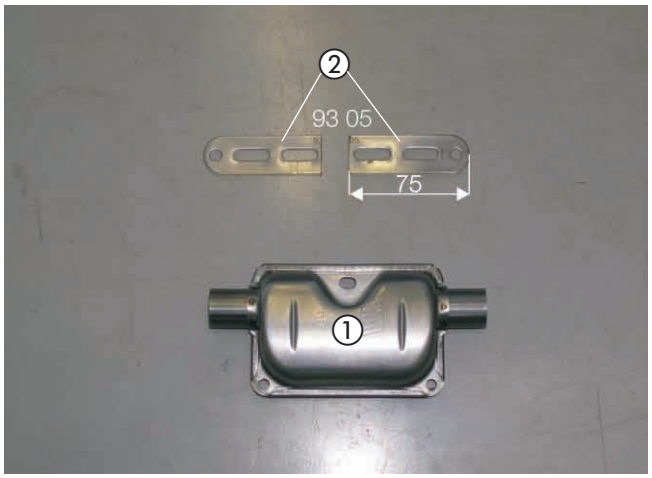

Bild 13

① Abgasschalldämpfer
② Halter (22 9000 50 93 05) getrennt

Den Abgasschalldämpfer an der rechten gefertigten Bohrung Ø 7 mm mit Schraube M6 x 16, Mutter M6 und Karosseriescheibe B6 montieren.
Die zweite Hälfte des Halters (9305) an der gefertigten Bohrung Ø 7 mm mit Schraube M6 x 16, Mutter M6 und Karosseriescheibe B6 entsprechend des Bildes befestigen.

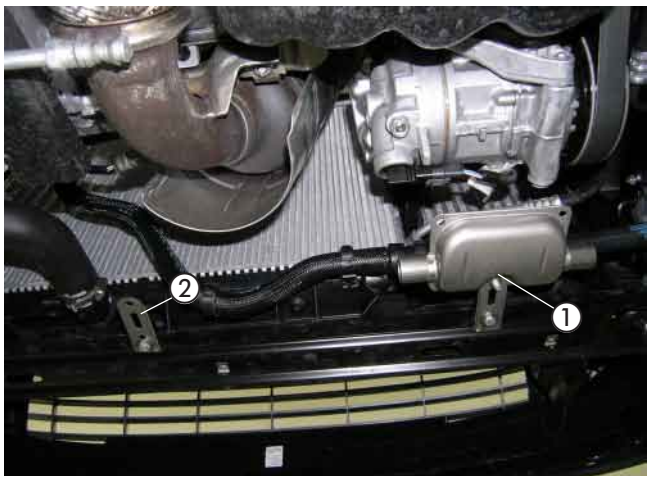

Bild 14

① Abgasschalldämpfer mit Halter montiert
② Halter montiert

4 Exhaust and combustion air circuit

Cut the exhaust pipe to a length of 860 mm and push on a spacer rubber profi le.
Use a pipe clamp to fasten the exhaust pipe to the exhaust connection of the heater, lay to the connection of the exhaust silencer and fi x using a pipe clamp.
Position the spacer rubber profi le at the level of the cable loom.
Install the exhaust pipe to the holder (9305) using a Ø 28 clamp and at the existing drillhole using M6 x 16 screw, body washer and M6 nut.

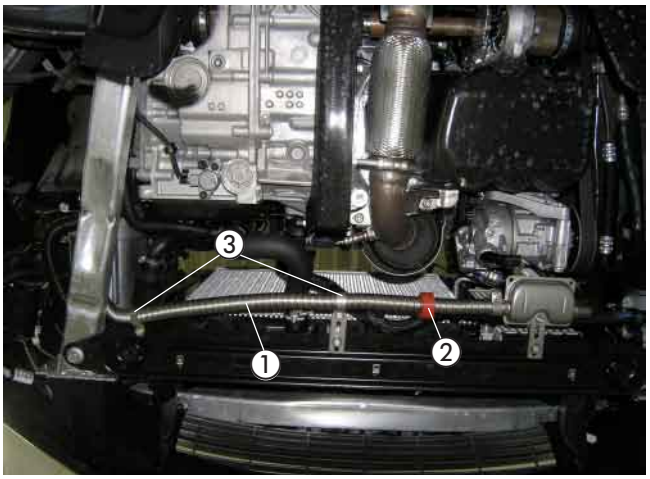

Photo 15

① Exhaust pipe connected
② Spacer rubber profi le in position
③ Clamps Ø 28 mm

Cut the exhaust end pipe to a length of 110 mm and use a pipe clamp to fasten to the outlet connection of the exhaust silencer.
Shape the exhaust end pipe downwards as shown in the photo.



Photo 16

① Exhaust end pipe connected

Please note!

When laying the exhaust pipes, ensure they are at a suffi cient distance from adjacent components and lines.

Install combustion air pipe
(see Photo 17)

Connect the combustion air pipe to the heater using a hose clip Ø 16 – 25 mm and lay it upwards under the left-hand headlight.
Use cable ties to fi x the combustion air pipe.
Make a drain hole Ø 2 mm for condensation in the deepest point of the laid combustion air pipe.



Photo 17

① Combustion air pipe laid

Please note!

Lay the combustion air pipe so that only clean, dry combustion air can be drawn in through the heater.

5 Fuel supply

Install fuel tank extractor
(see Sketch 2 and Photos 18 to 20)

Prepare the riser pipe of the fuel tank extractor as shown in the sketch.
Obliquely cut the bottom end of the riser pipe, with approx. 45° angle, to the correct length.

Remove the plastic cover above the tank fi tting.
Undo the plug-in connection and the fuel line at the tank connection.
Remove the tank fi tting from the tank opening by loosening the universal nut.

Please note!

The tank fi tting should not be removed for longer than 10 minutes because of expansion of the tank!

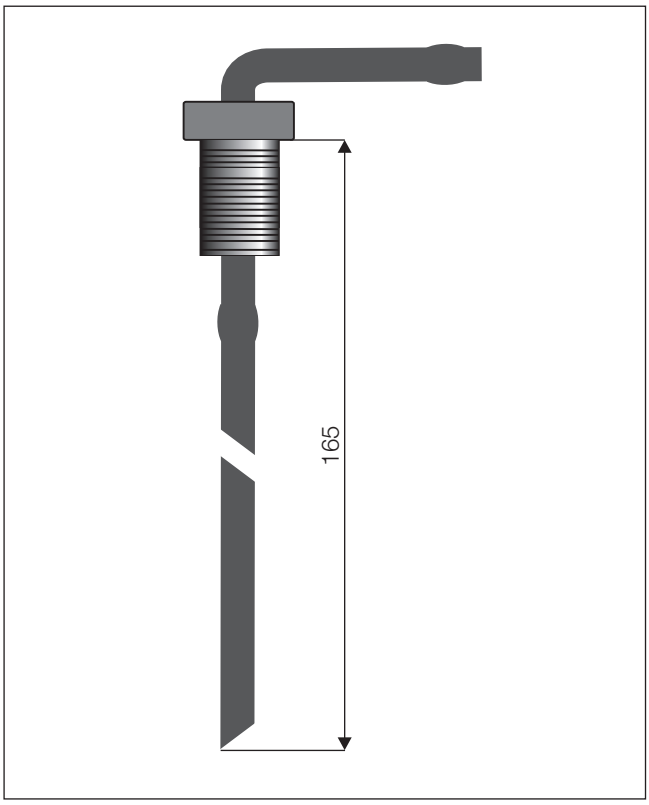

Sketch 2

Make a Ø 8 mm drillhole in the pre-marked position in the upper section of the tank fi tting.
Guide the fuel tank extractor through the prepared hole in the cover of the tank fi tting, screw tight with the M8 nut and align as shown in the photo.

Please note!!

When drilling, ensure that no dirt gets into the the tank or the supply lines.



Photo 18

① Fuel tank extractor installed

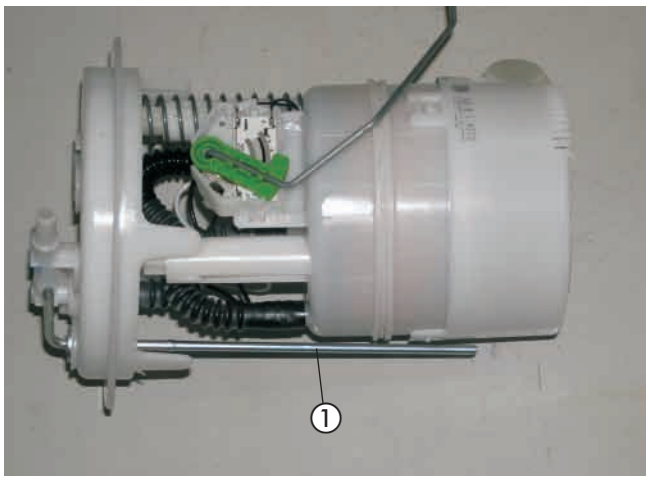

Photo 19

① Fuel tank extractor installed

5 Fuel supply

Install fuel tank extractor
(see Sketch 2 and Photos 18 to 20)

Prepare the riser pipe of the fuel tank extractor as shown in the sketch.
Obliquely cut the bottom end of the riser pipe, with approx. 45° angle, to the correct length.

Remove the plastic cover above the tank fi tting.
Undo the plug-in connection and the fuel line at the tank connection.
Remove the tank fi tting from the tank opening by loosening the universal nut.



Photo 20

① Fuel tank extractor connected

Install metering pump and connect
(see Photos 21 and 22)

Insert the metering pump in the rubber holder and fix to the bracket (90° angle) using an M6 x 20 screw, M6 nut and B6 body washer.
Install the metering pump with bracket (90° angle) to the tank on the left-hand side at the existing elongated hole using M6 x 16 screw and M6 nut.
Ensure it is installed with at least 15° rising gradient on the discharge side.
The discharge connection of the metering pump is pointing towards the rear.
Cut the fuel pipe Ø 4 x 1 mm from the fuel tank extractor to the
metering pump and connect to the fuel hose Ø 3.5 x 3 mm, length 50 mm at the intake connection of the metering pump.
Remove the mating connector of the metering pump connection at the main cable harness.
Remove the dummy plugs from the mating connector.
Plug the connector of the metering pump cable supplied into the metering pump connection of the main cable harness.
Connect the fuel pipe Ø 4 x 1.25 mm with the fuel hose Ø 3.5 x 3 mm, length 50 mm, to the heater, cover with sponge rubber hose and lay together with the „metering pump“ cable loom along the brake lines to the installation position of the metering pump.
Cut the fuel pipe Ø 4 x 1.25 mm to the correct length, connect
with fuel hose Ø 3.5 x 3 mm, length 50 mm, to the discharge connections of the metering pump and fix with cable ties.

Please note!

Deburr all finished holes and treat with anti-corrosion agent.
Use a sharp knife to cut the fuel pipe to length.
Secure all hose connections with hose clips.
When laying fuel lines, always ensure they are at an adequate distance from hot vehicle and heater parts.



Photo 21

① Metering pump with bracket (90° angle) installed



Photo 22

① Fuel pipe and cable loom laid

Connect the fuses, fan relay and relief relay
(see Photo 23 and Sketch 3)

Use two M4 x 16 screws to fi x the fuse holder and M5 x 12 screws to fi x the relay base to the housing of the E-box in the engine compartment on the left-hand side.
To do this, make the Ø 4.5 mm and Ø 5.5 mm holes.
Connect the 8 pin connector of the main cable harness with the 8 pin fl at connector housing of the heater‘s cable loom.
Remove the dummy plugs from the fuse base.
Latch the cable 4 mm² rt/ws from the relay base into the still free slot of the fuse base.

Crimp cable 4 mm² sw and 4 mm² sw/vi from the relay base of relay 2.5.7.
Attach the crimped cable 4 mm² sw to the 3-way distributor.
Latch the free cable 4 mm² sw with the push-on sleeve into the relay base of Relay 2.5.7 in slot 87a.
Attach the crimped cable 4 mm² sw/vi to the 3-way distributor.
Latch the free cable 4 mm² sw/vi with the push-on sleeve into the relay base of Relay 2.5.7 in slot 30.
Disconnect the push-on sleeves at the cables 0.5 mm² sw/rt and 0.5 mm² br of the main cable harness.
Attach the cable 1 mm² br from the relief relay together with the cable 0.5 mm² br of the main cable harness in a new push-on sleeve and latch the push-on sleeve into the relay base of Relay 2.5.7 at slot 85.



Photo 23

① Fuses and fan relay installed

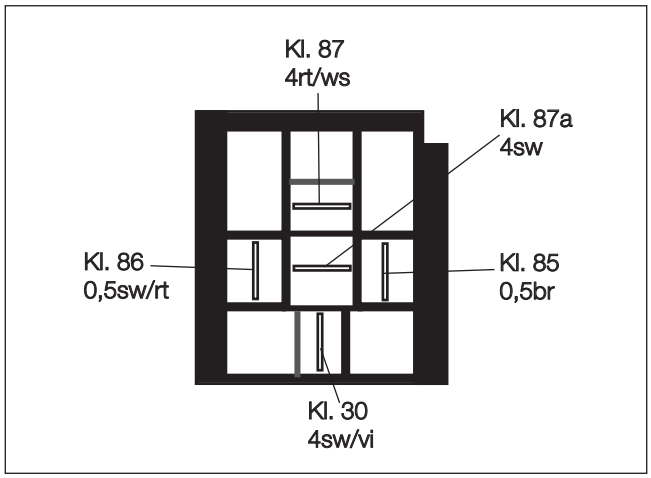

Sketch 3

View of the relay base from the cable inlet side

Cable laying
(see Photo 24)

Make a Ø 16 mm hole in the engine partition at the premarked position behind the glove compartment for the laying of the cable looms and insert grommet Ø 16.5 mm.
Lay the „Control“ cable loom through the grommet into the inside of the vehicle and up to the driver‘s side.

Please note!

Deburr all finished holes and treat with anti-corrosion agent.



Photo 24

① Grommet Ø 16.5 mm inserted

Power supply
(see Photo 25)

Guide the plus cable 4 mm² rt up to the plus support point in the E-box on the left-hand side in the engine compartment, replace the A6 cable lug with an A8 cable lug and connect with M8 nut.

Guide the minus cable 2.5 mm² br up to the ground support point on the left-hand side member and connect the A6 cable lug with the existing M6 screw.

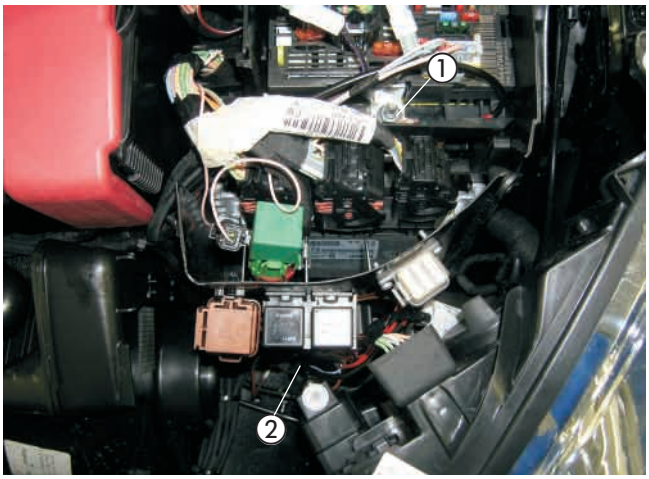

Photo 25

① Plus cable connected
② Minus cable connected

Fan control
(see Photos 26 to 29 and Sketches 4, 5 and 6)

Lay the „fan control“ cable loom to the E-box on the left-hand side in the engine compartment.
Disconnect the cable 4 mm² rs at the 2-pin black connector, Pin 2 and tie in the cable 4 mm² sw as well as 4 mm² sw/vi according to the circuit diagram with plug-in connectors.



Photo 26

① 4 mm² rs cable disconnected
② 4 mm² sw and 4 mm² sw/vi cables connected

The air conditioning fan and the automatic 2 zone air conditioning are controlled by an IPCU module.
Install an additional isolating relay in the automatic 2 zone air conditioning.
Install the base for the IPCU module and the isolating relay at the holder (22 1000 50 64 00) using M5 x 10 screws and M5 nuts.
Install the base with holder behind the glove compartment on the supporting strut of the dashboard at the existing elongated hole using M6 x 16 screw and M6 nut as shown in the photo.
Screw down the cable 1 mm² br from the IPCU module and

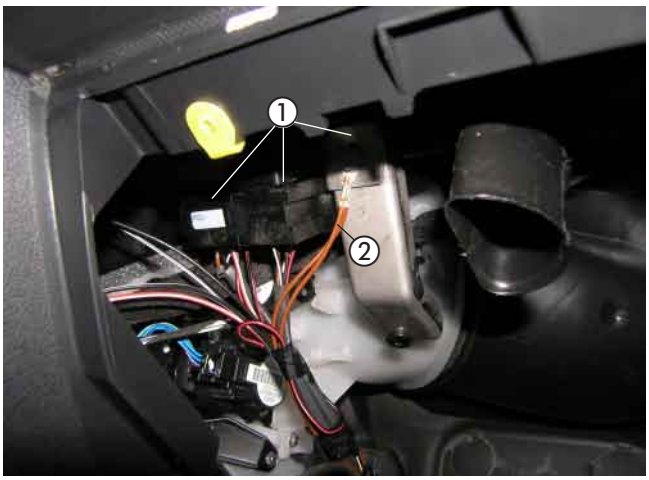

Photo 27

① IPCU module and additional relay with holder installed
② Cable 1 mm² br connected

Guide the cables 1 mm² sw/rt and 1 mm² rt/ws from the base of the IPCU module as well as the cable 1 mm² sw/rt from the isolating relay through the cable penetration made into the engine compartment and on to the E-box.

Attach the cables 0.5 mm² sw/rt from relay 2.5.7 and from relief relay 1 mm² sw/rt together with the cable 1 mm² sw/rt of the IPCU module in a new push-on sleeve 2.5 mm² and latch into the relay base of relay 2.5.7 at slot 86.

Tie in the cable 1 mm² rt/ws from the IPCU module and 1 mm² sw/rt from the isolating relay in the cable 0.5 mm² rt at the 24 pin black connector, pin 17 with plug-in connectors according to the circuit diagram.

Bitte beachten!

Bei Fahrzeugen der Modelljahre bis 2007 das Kabel 1 mm² rt/ws vom IPCU-Modul und 1 mm² sw/rt vom Trennrelais in das Kabel 0,5 mm² rt am 24-poligen schwarzen Stecker, Pin 17 mit Steckverbindern entsprechend des Schaltplanes einbinden.

Dismantle the air conditioning control according to the manufacturer‘s instructions.
Lay the 1 mm² sw and 1 mm² sw/ws cables from the base of the IPCU module as well as the 1 mm² sw/ws and 1 mm² rt/ws cables from the base of the isolating relay to the airconditioning
control.

In vehicles with air conditioning
At the air conditioning control from the 6 pin black connector, disconnect cable 0.35 mm² ws in Pin 5.
Tie in cables 1 mm² sw and 1 mm² sw/ws from the IPCU module with the plug-in connectors according to the circuit diagram.

In vehicles with automatic 2-zone air conditioning
Remove the 20 pin brown connector from the 40 pin blue connector at the air conditioning control and disconnect cable 0.35 mm² ge in Pin 20.
Tie in cables 1 mm² sw and 1 mm² sw/ws from the IPCU module with the plug-in connectors according to the circuit diagram.
In addition, disconnect cable 0.75 mm² gn/ge at the 6-pin black connector, pin 4.
Tie in cables 1 mm² sw/ws and 1 mm² rt/ws from the isolating relay with the plug-in connectors according to the circuit diagram.

Important!

Take care to ensure the A and E connections at the IPCU module are not mixed up / reversed.
This could destroy the vehicle‘s electronics.



Photo 28

① 1 mm² 0.5 mm² rt cable disconnected
② 1 mm² rt/ws and 1 mm² sw/rt cables connected

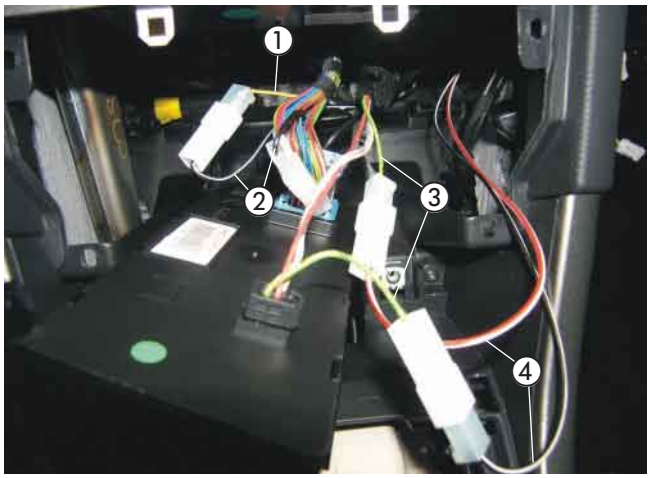

Photo 29

① 0.35 mm² ge cable disconnected
② 1 mm² sw/ws and 1 mm² sw cables connected
③ 0.75 mm² gn/ge cable disconnected
④ 1 mm² sw/ws and 1 mm² rt/ws cables connected

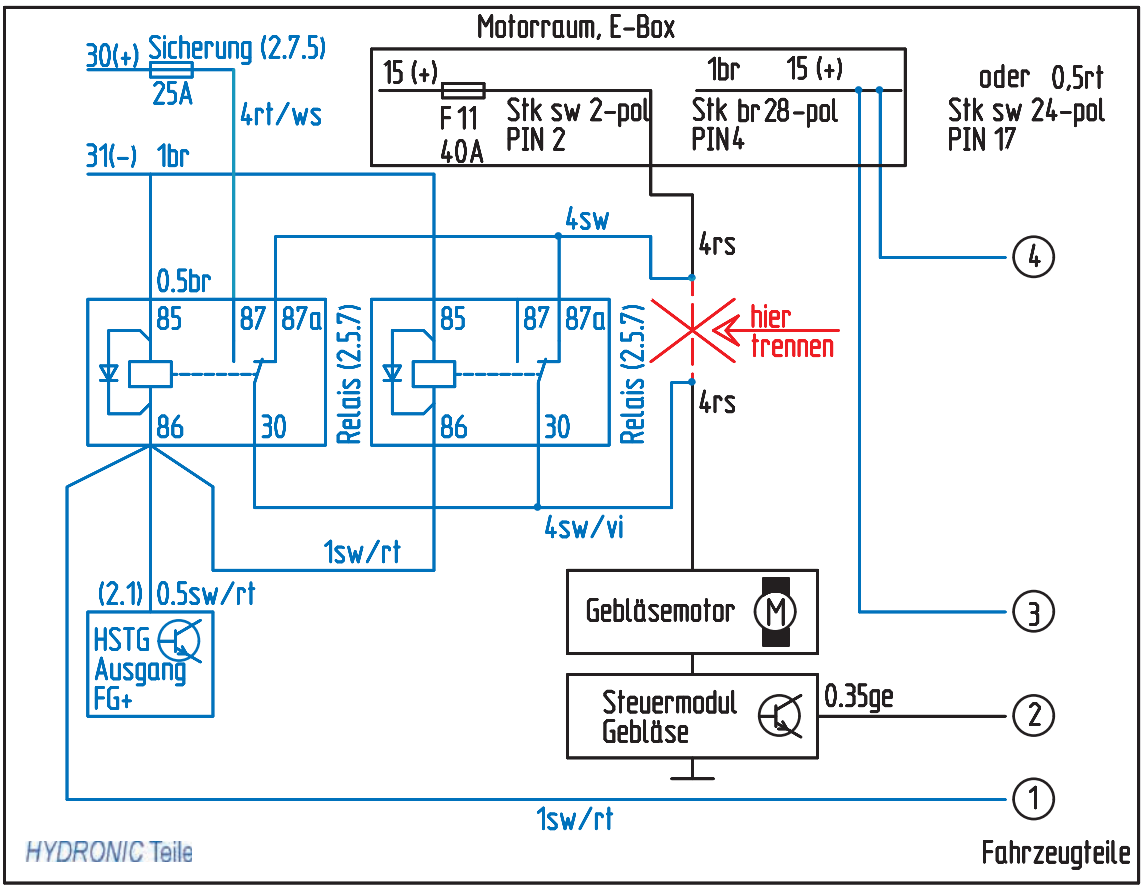

Sketch 4

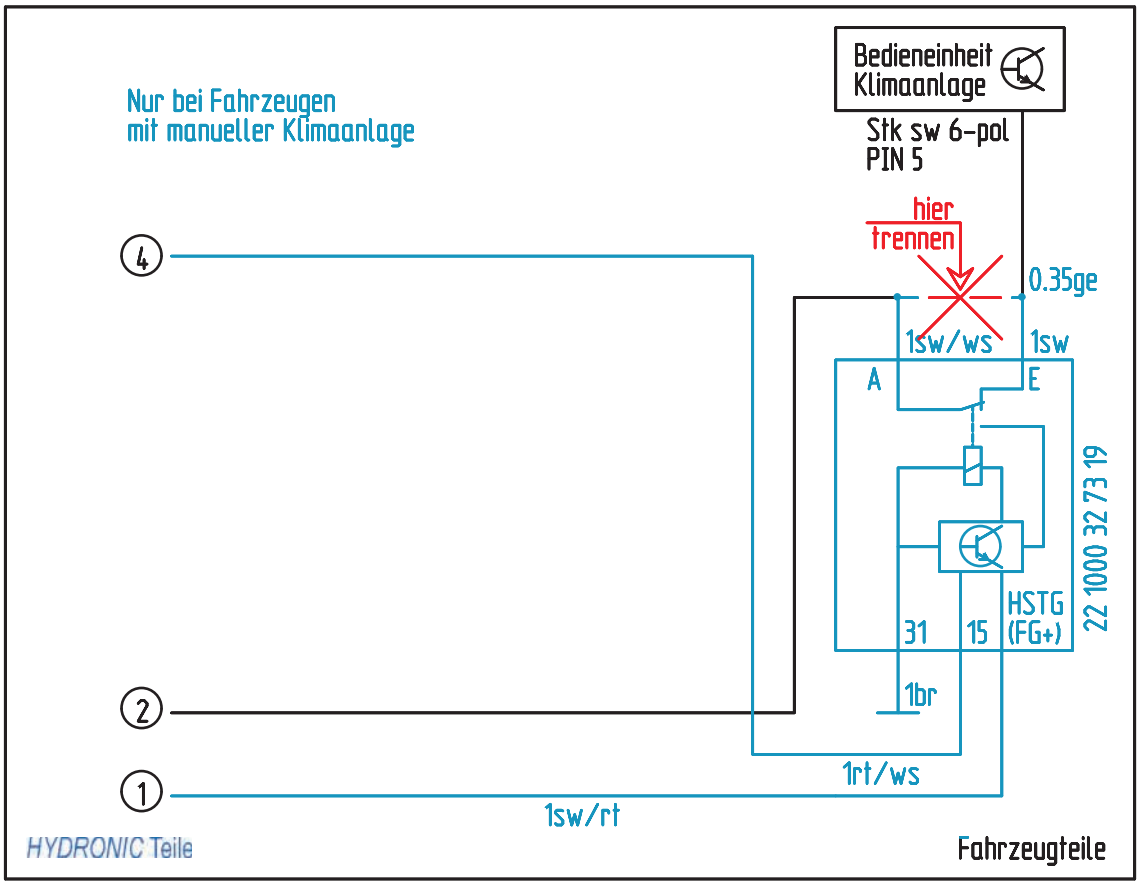

Sketch 5

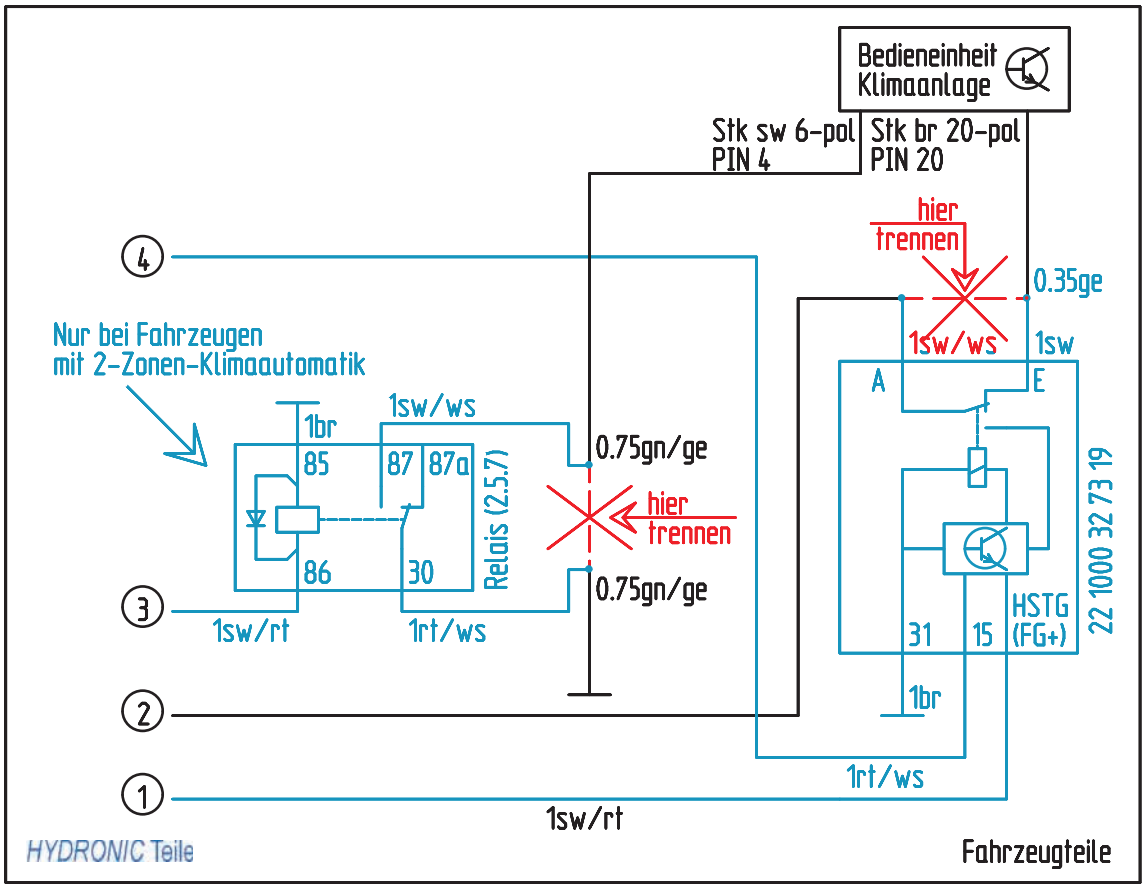
Bedieneinheit Klimaanlage
Stk sw 6-pol PIN 4
Stk br 20-pol PIN 20
hier trennen
0.35ge
1sw/ws
1sw
A
E
4
Nur bei Fahrzeugen mit 2-Zonen-Klimaautomatik
1br
1sw/ws
85
87
87a
Relais (2.5.7)
0.75gn/ge
hier trennen
0.75gn/ge
86
30
3
1sw/rt
1rt/ws
31
15
HSTG (FG+)
22 1000 32 73 19
2
1br
1rt/ws
1
1sw/rt
HYDRONIC Teile
Fahrzeugteile

Sketch 6

Install EasyStart T
(see Photo 30)

The EasyStart T is installed according to the „EasyStart T“ installation instruction.
Install the EasyStart T with the console on the left-hand trim next to the steering column as shown in the photo.
Align the console on the mounting surface and trace the drillholes onto the mounting surface.
Make the Ø 3 mm and Ø 8 mm holes.
Remove the drilling template after making the holes.
Fix the console using the B 3.5 x 19 fi xing screws supplied.
Guide the „control“ lead harness through the Ø 8 mm hole and use the expansion plug to pre-install the timer in the Ø 6.5 mm hole.
Push or screw the fi xing screw into the expansion plug and use it it fi x the timer.
Latch in the fl at connector from the „Control“ lead harness into the 9 pin fl at connector housing, the already installed push-on sleeves into the push-on sleeve housing.
Push the fuse clasp into the fl at connector housing.
Pull off the protective fi lm of the cover cap and glue in the cover cap.

Bitte beachten!

Do not decide on the installed location of the timer until after consulting the customer.



Photo 30

① EasyStart T installed

Install EasyStart R/R+ radio remote control (Alternative suggestion – consult with the customer)
(Photos 31 and 32 and Sketch 7**)**

The EasyStart R/R+ is installed according to the Technical Description for the EasyStart R/R+ Radio Remote Control; see the „Installation Instruction“ section.
Install the EasyStart R/R+ button on the panelling behind the shift gate as shown in the photo.
To this end, make a Ø 8 mm drillhole in the panelling and insert the button in the Ø 8 mm drillhole.



Photo 31

① EasyStart R/R+ button installed

6 Electrics

Prepare the holder as shown in the sketch.
Fix the stationary part of the EasyStart R/R+ to the holder using two M4 x 10 screws and M4 nuts.

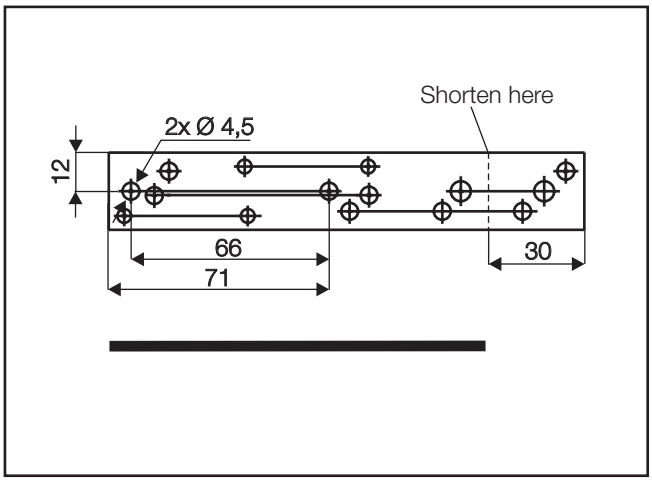

Sketch 7

Install the stationary part of the EasyStart R/R+ with holder behind the glove compartment on the supporting strut of the dashboard at the existing elongated hole using M6 x 16 screw and M6 nut as shown in the photo.
Attach the temperature sensor of the EasyStart R/R+ to the trim of the A pillar in the passenger footwell.
Lay the cable from the installed button and temperature sensor together with the „Control“ cable loom to the installed position of the stationary part.
Cut the cables to the correct length, crimp the push-on sleeves, attach the bush housing B7 and connect to the stationary part.
Connect the antenna cable of the EasyStart R/R+ to the stationary part, guide to the right and lay in the rubber door seal on the passenger side.

Please note!

Stationary part of the EasyStart R/R+ installed with holder
Avoid contact with metal parts at the uninsulated end of the antenna cable.
Use cable ties to fi x any excessive length of antenna cable



Photo 32

① Stationary part of the EasyStart R/R+ installed with holder

7 After installation

Insert grommet for exhaust end pipe
(see Photos 33 and 34)

Make one Ø 41 mm drill hole in the bottom engine panelling as shown by the dimensioning in the photo.
Insert the grommet for the exhaust pipe.



Photo 33

① Grommet for exhaust pipe inserted

Re-install the bottom engine panelling and guide the exhaust end pipe through the grommet for the exhaust pipe.



Photo34

① Grommet for exhaust pipe
② Exhaust end pipe

Complete the vehicle

- Install all removed parts in the reverse order.
- Reconnect the battery.
- Check the hoses, hose clips and pipe clamps as well as all electrical connections for secure fi t.
- Use cable ties to secure all loose cables, lines, etc.
- Set the clock.
- Fill the cooling system, start the engine, vent the cooling system and check for leaks, top up missing coolant liquid up
  to marking (arrow).
- Please also note and follow the vehicle manufacturer‘s information
  on fi lling and venting the cooling system.
- Read and observe all offi cial regulations and safety instructions
  in the Technical Description.
- Program the control and place the Operating Instruction

Starting up the heater

- Switch on the heater at the control.
  See Operating Instructions – Control.

Please note!

Fill the cooling system with the coolant liquid specifi ed by the vehicle manufacturer only.

8 Parts Overview

Item	Designation	Quantity	Order number
1	Fahrzeugspezifische Zusatzteile	1	24 8311 00 00 00
	darin enthalten:		
	Halter Heizgerät	1	
	Halter	1	
	Halter	1	
	Halter	1	
	Halter	1	
	Halter	1	
	Linsenschraube M4 x 10	2	
	Skt.-Schraube M6 x 16	8	
	Skt.-Mutter M4	2	
	Skt.-Mutter M6	5	
	Wellscheibe B4	2	
	Wellscheibe B6	6	
	Karosseriescheibe B6	6	
	Kabelschuh A8	1	
	Blindnietmutter M6	2	
	Schelle Ø 28 mm	1	
	Abstandsgummiprofil	1	
	Tülle Ø 16,5 mm	1	
	Tülle Ø 41 mm	1	
	Kunststoffschelle	5	
	Wasserschlauch, 180°-Bogen	1	
	Kit Entlastungsrelais	1	
	Verbindungsrohr Ø 18 mm	1	
	Wärmeschrumpfschlauch	1,20 m	
	Moosgummischlauch Ø 5 x 3 mm	6,00 m	
	Klima-Kit Peugeot 308	1	



Item1 Vehicle-specific additional parts 1 set

9 Leafl et for the customer

Before switching on
(see Photo 1)

- Before switching on or pre-programming heating mode with the ignition switched on, set the vehicle's temperature controller to „Hot“ („HI“ in the display).
- Switch the button for the air system to Defroster. Maximum air directed to the front windscreen.
- The fan speed does not need to be pre-selected.



Photo 1

① Temperature controller
② Button for the air system