HYDRONIC

Installation Recommendations

Eberspächer

J. Eberspächer
GmbH & Co. KG
Eberspächerstr. 24
D - 73730 Esslingen

Service Hotline
01805 - 26 26 26
Facsimile
01805 - 26 26 24

New vehicle-specific installation kit + heater

Hydronic B 4 W SC in the Toyota Prius ZVW 30 (XW3)

from year 01/2009 to 03/2012 (2010 model)
HSN: 5013
1.8 l cubic capacity / 4 cylinder in-line engine / 73 kW - 99 HP (TSN: AEW)

- with automatic gearbox
- with automatic air-conditioning
- with fog lamps
- with xenon headlamps

This installation recommendation is valid for the vehicle described above and is exempt from any liability claims whatsoever.
Depending on the version or modification status of the vehicle, differences can result between the vehicle and this installation recommendation.
The installer must check this before installation and, if necessary, take into account the differences compared to this installation recommendation.

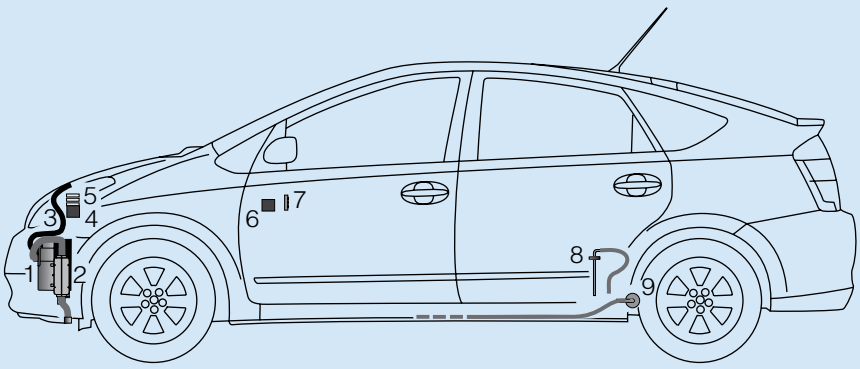

1	Hydronic	6	IPCU module
2	Exhaust pipe with exhaust silencer	7	EasyStart T
3	Combustion air pipe	8	Fuel tank extractor
4	Fan relay	9	Metering pump
5	Fuse block		

Installation location

The Hydronic is installed in the front, left-hand quarter bumper.
The exhaust connection faces forwards and the control box upwards.

Parts needed for installation:

(1) Vehicle-specific installation kit
(2) B 4 W SC
(3) EasyStart control unit as chosen

Installation time: approx. 7 h

Contents

		Page
1	Introduction	2
2	Preparation of the vehicle	4
3	Preliminary assembly	6
4	Installation	10
5	After installation	22
6	Parts Overview	23
7	Leaflet for the customer	25

 © J. Eberspächer GmbH & Co. KG

1 Introduction

Important!
Safety instructions for installation and repair!

Improper installation or repair of Eberspächer heaters can cause a fire or result in poisonous exhaust fumes entering the vehicle interior.
This can pose a serious risk to life and limb.

The heater may only be installed by authorised and trained persons according to the specifications in the technical documents and repaired using original spare parts.
Installation and repairs by unauthorised and untrained persons, repairs using non-original spare parts and without the technical documents required for installation and repair are dangerous and therefore are not permitted.

Please note!

Installation according to this installation recommendation may only be carried out in conjunction with the respective unit type-related technical description, installation instructions, operating instructions and maintenance instructions.
This document must be carefully read through before / during installation and followed throughout.
Particular attention is to be paid to the safety instructions and the general information.
The relevant rules of sound engineering practice and any information provided by the vehicle manufacturer are to be heeded during the installation.
Eberspächer does not accept any liability for defects and damage due to installation by unauthorised and untrained persons.

Accident prevention

General accident prevention regulations / health and safety regulations and the corresponding workshop, company and operating safety instructions are to be observed.

Installation recommendation validity

The installation recommendation is valid for the vehicle with the engine and gearbox options listed in the following.

Engine and gearbox options		
Cubic capacity	kW / HP	Gearbox
1.8 l	73 / 99	continuously variable

Please note!

The installation recommendation is not valid for right-hand drive vehicles.

Vehicle types, engine types and feature options not listed in this installation recommendation have not been tested.
Installation according to this installation recommendation can still be possible.

1 Introduction

Parts required for installation

Quantity / Designation	Order No.
(1) Vehicle-specific installation kit	
1 Vehicle-specific installation kit *	24 8496 00 00 00
(2) Heater:	
1 Hydronic B 4 W SC	20 1824 05 00 00
(3) EasyStart control unit as chosen:	
1 EasyStart T	22 1000 32 88 00
1 Console	22 1000 51 32 00
or	
1 EasyStart R+ radio remote control	22 1000 32 80 00
or	
1 EasyStart R radio remote control	22 1000 32 85 00

**** Important:*** *The new vehicle-specific installation kit contains* ***all*** *parts needed for installation.*

Special tools required

- Torque wrench (5....50 Nm)
- Anti-corrosion agent
- Pliers for spring band clamps
- Tool for blind rivet nuts
- Ejector tool for plug-in contacts
- Step drill
- Crimping tool

Tightening torques

If no tightening torques are specified, tighten the screw connections (hexagon screw and hexagon nut) according to the following table.

Screwed connections	Tightening torques
M6	10 Nm
M8	20 Nm
M10	45 Nm

2 Preparation of the Vehicle

- Disconnect the battery
- Remove rear seat bench
- Remove glove compartment
- Dismantle right-hand footwell panelling
- Dismantle wiper arms
- Dismantle wiper pan cover
- Dismantle wiper motor with wiper mechanism
- Dismantle wiper pan
- Dismantle the top engine cover
- Dismantle the front bumper
- Dismantle engine underbody panelling
- Dismantle left-hand underbody panelling
- Drain coolant into a clean container

Instruction for removing the rear seat bench
(see photo 1)

Unlatch the rear seat bench from the holder on the left and right-hand side, fold up and remove.



Photo 1

① 2 x fixing of the rear seat bench, view from the right-hand side

Instructions for removing the glove compartment
(see photo 2)

Unlatch the holder on the right-hand side at the glove compartment.
Unlatch the glove compartment from the guide on the left and right-hand side and remove.

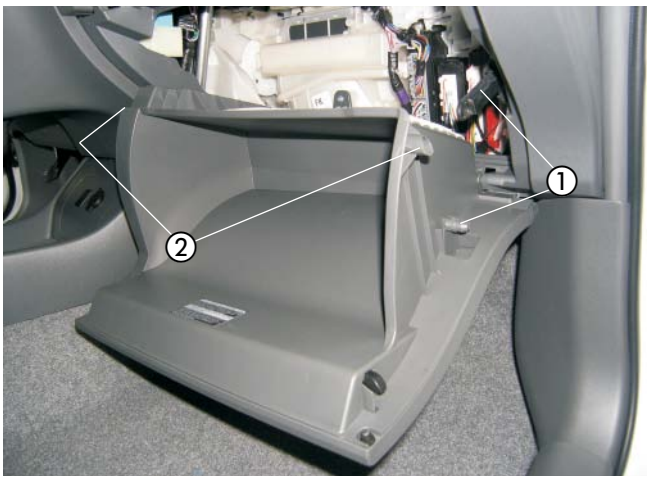

Photo 2

① Holder
② Guide, unlatched

Instructions for removing the bumper
(see photos 3 to 5)

Release the vehicle's eleven clips at the top of the bumper and remove.



Photo 3

① 11 x clips

Release and remove the vehicle's screw and the clip to the wheel arch.



Photo 4

① 1 x screw, 1 x clip

Release the vehicle's fourteen screws and the three clips on the underside of the bumper and remove.

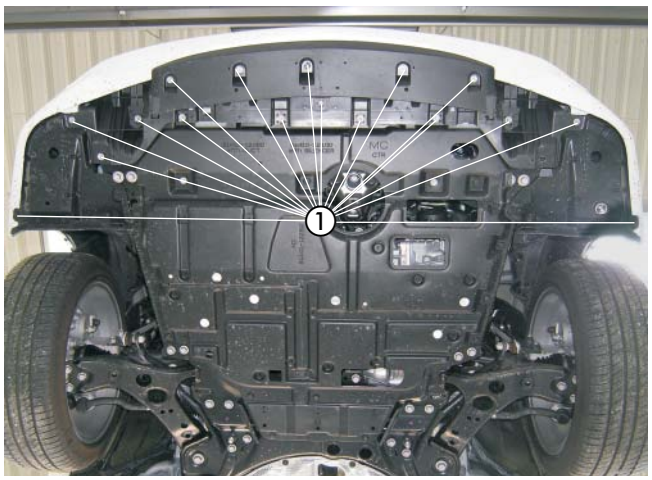

Photo 5

① 14 x screw, 3 x clip

3 Preliminary Assembly

Prepare the unit holder
(see photo 6)

Fit a holder (Z bracket 22 9000 50 2603) to the unit holder with a screw M6 x 16 as shown in the photo.

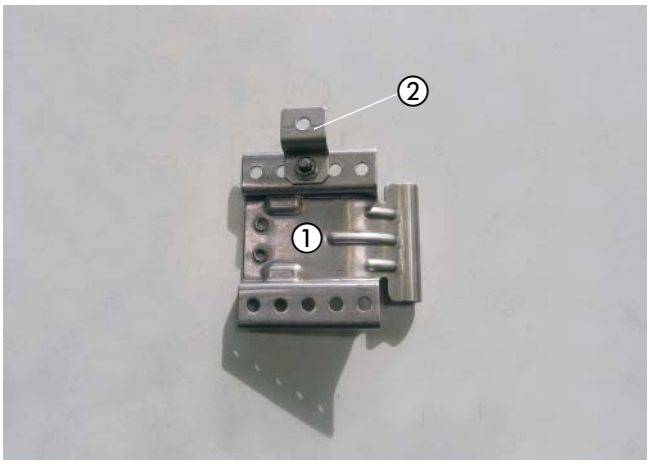

Photo 6

① Unit holder
② Holder (Z bracket 22 9000 50 2603)

Heater, preassembled
(see photo 7)

Connect the combustion air pipe to the heater with a hose clip Ø 16 - 25 mm and shape upwards as shown in the photo.

Connect the fuel pipe, Ø 4 x 1.25 mm, with fuel hose, Ø 3.5 x 3 mm, to the fuel connection of the heater using a hose clip, Ø 9 mm.
Use insulating tape to fix the metering pump cable to the fuel pipe, Ø 4 x 1.25 mm.

Remove the duplicate nameplate from the heater.
Deface the inapplicable dates to make them illegible.
Attach the duplicate nameplate in a suitable, clearly visible position in the engine compartment.

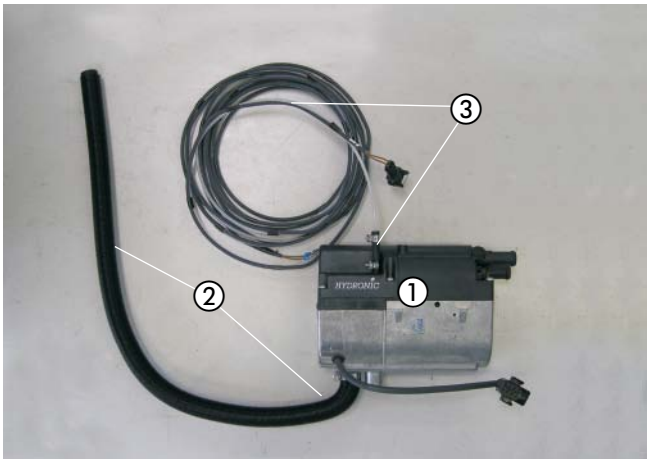

Photo 7

① Heater
② Combustion air pipe
① Fuel pipe, Ø 4 x 1.25 mm, connected

Prepare exhaust silencer and exhaust pipes
(see photo 8)

Cut the exhaust pipe to a length of 250 mm. Connect the exhaust pipe with a pipe clamp to the inlet connection of the exhaust silencer and shape it in the bend as shown.

Cut the exhaust end pipe to a length of 150 mm.
Use a pipe clamp to connect the exhaust end pipe to the exhaust silencer's outlet connection and shape it as shown in the photo.

The arrow on the exhaust silencer marks the direction of flow and points downwards.

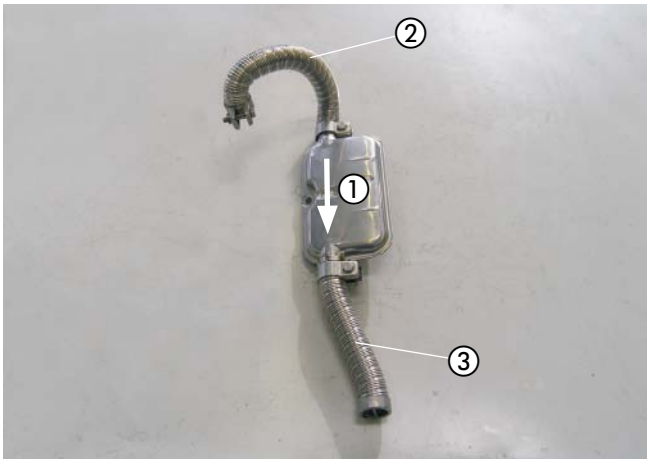

Photo 8

① Exhaust silencer
② Exhaust pipe
③ Exhaust end pipe

3 Preliminary Assembly

Prepare the water hoses
(see diagram 1)

Cut the water hoses according to the dimensions in the diagram and prepare.

Please note!

The water hoses are connected "inline" to the water circuit , refer to the Technical Description, in the chapter on "Installation" and here the section on "Connection to the Cooling Water Circuit".

Water hose ①
from the engine to the heater

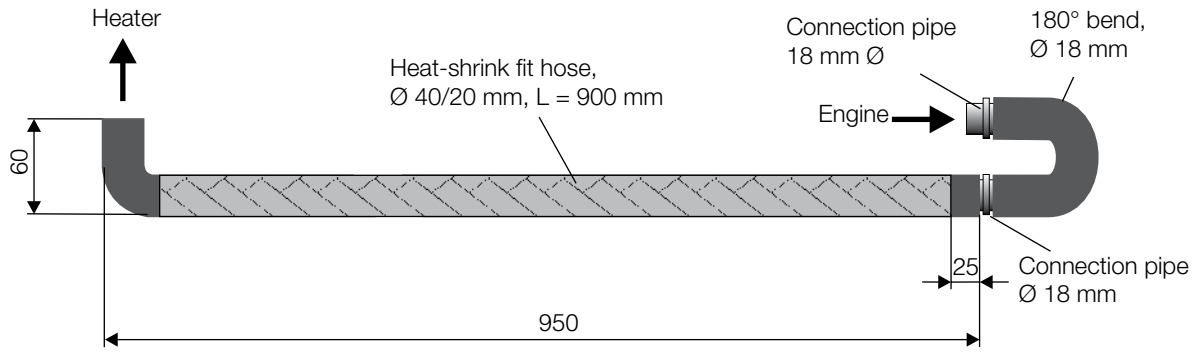

Water hose ②
from the heater to the heat exchanger

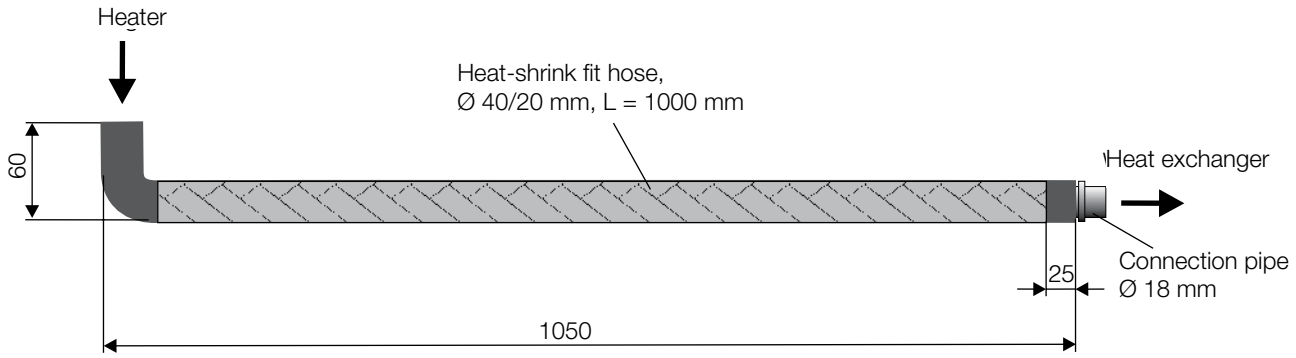

Diagram 1

3 Preliminary Assembly

Preassemble metering pump
(see photo 9)

Insert the metering pump in the rubber holder.
Mount the holder (90° angle bracket 9501) to the rubber holder using a screw M6 x 20 and a body washer B6 as shown in the photo.

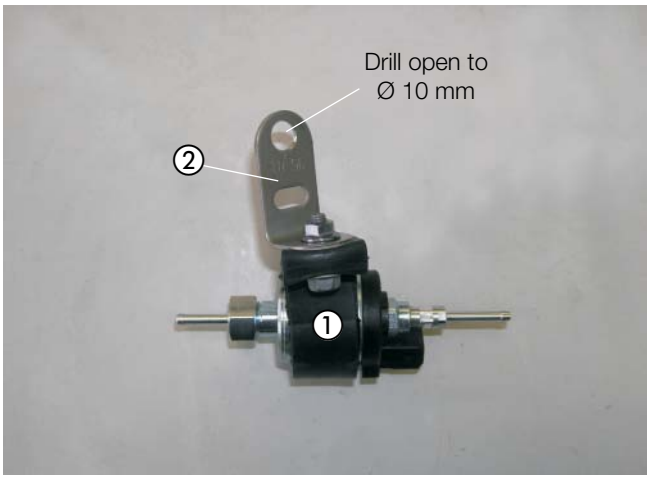

Photo 9

① Metering pump, in the rubber holder
② Holder (90° angle bracket 9501)

Prepare fuel tank extractor
(see diagram 2)

Prepare the riser pipe of the fuel tank extractor as shown in the diagram.
Cut the bottom end of the riser pipe at an angle of approx. 45°.

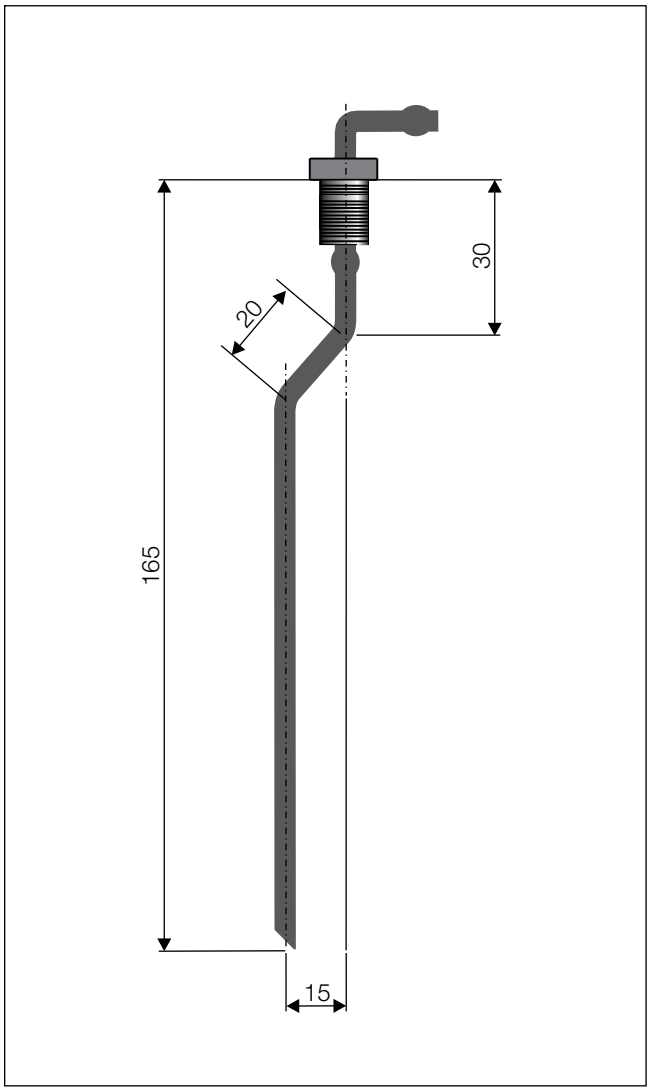

Diagram 2

Prepare holder for fuse and relay block and preassemble fuse and relay block
(see photo 10 and diagram 3)

Prepare the holder for the fuse and relay block as shown in the diagram.

Fasten the fuse holder with two M4 x 16 screws and the relay block with one M5 x 10 screw to the holder for the fuse and relay block.

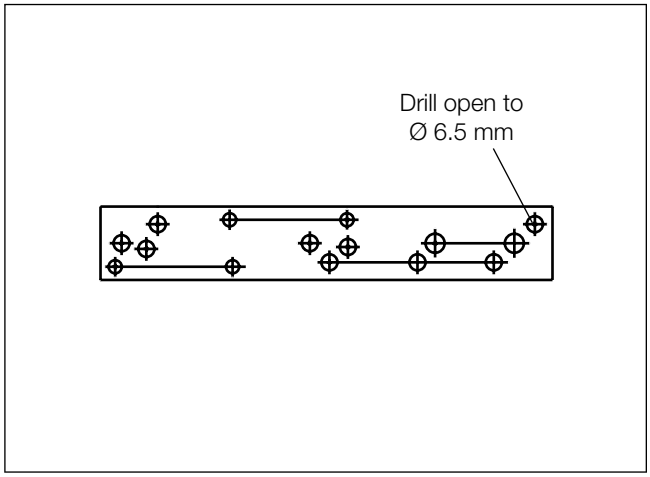

Diagram 3

Latch the cable 4 mm² rt/ws from the relay block of relay 2.5.7 into the still free slot of the fuse block and insert the relay in the connector block.

Replace the 25A fuse with a 10A fuse and disconnect the bushing connector at cable 0.5 mm² sw/rt of the main cable harness.

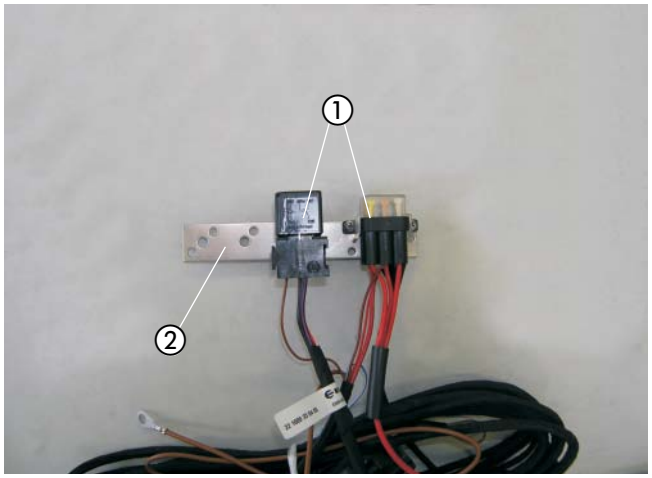

Photo 10

① Fuse and relay block
② Fuse and relay block holder

Prepare holder for stationary part of EasyStart R/R⁺ and preassemble stationary part
(see photo 11 and diagram 4)

Prepare the holder for the stationary part of the EasyStart R/R⁺ as shown in the diagram.

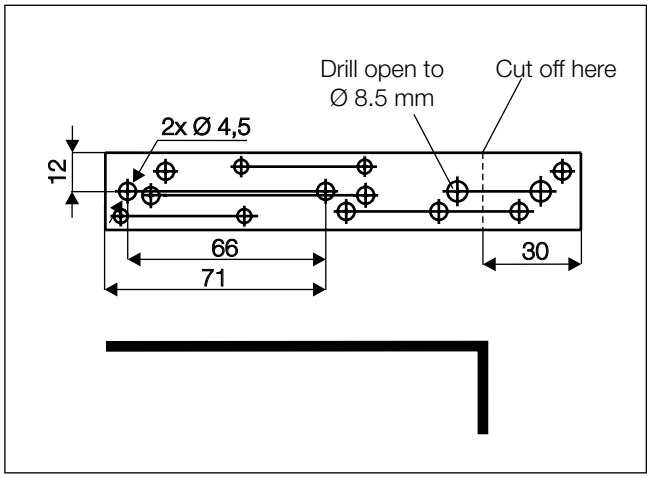

Diagram 4

Fix the stationary part of the EasyStart R/R⁺ to the holder using two M4 x 16 screws.



Photo 11

① Stationary part of the EasyStart R/R⁺
② Holder of the EasyStart R/R⁺ stationary part

4 Installation

Prepare the installation position
(see photos 12 and 13)

Unclip the vehicle's cable looms at the outside of the left side member and lay them out of the installation area.
Pull an M6 blind rivet nut into the existing hole, Ø 9 mm.
Premount the prepared unit holder with the holder (Z bracket 22 9000 50 2603) at the blind rivet nut, align vertically and mark off the second hole of the bottom row of holes from behind on the side member.
Make a drillhole Ø 7 mm in the marked position.

Mark the plastic panelling according to the dimensioning.

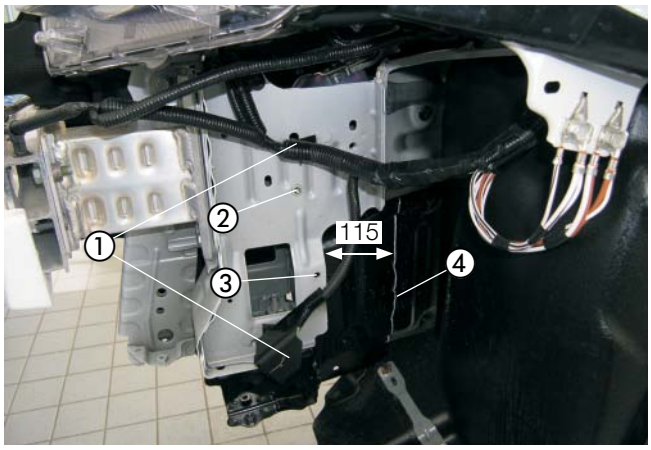

Photo 12

① 2 x vehicle's cable loom
② Blind rivet nut M6
③ Drillhole, Ø 7 mm, made
④ Marking on the plastic panelling

Please note!

Deburr all finished holes and treat with anti-corrosion agent.

Disconnect the plastic panelling along the marking and unclip and remove the front part.

Push a screw M6 x 16, through the drillhole made, Ø 7 mm, from the inside and screw on a nut M6.

Drill the rear existing hole, Ø 10 mm, to Ø 38 mm in the front bottom panelling of the wheel arch liner and insert the exhaust grommet.

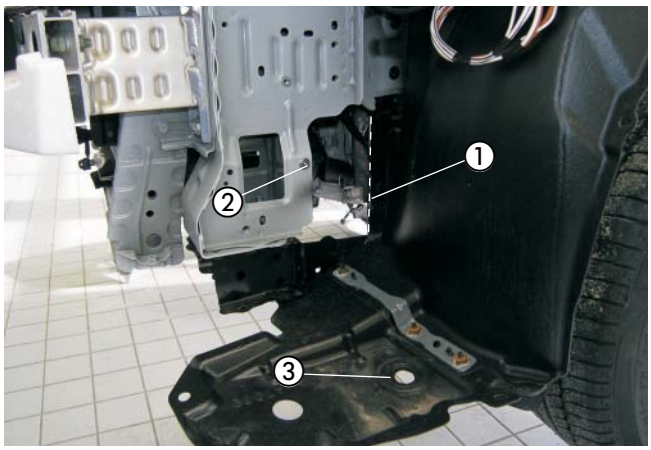

Photo 13

① Front part of the plastic panelling removed
② Screw M6 x 16
③ Exhaust grommet, inserted

Unit holder, installed
(see photo 14)

Mount the unit holder, as shown in the photo, with the holder (Z bracket 22 9000 50 2603) at the blind rivet nut M6 with a screw M6 x 16.

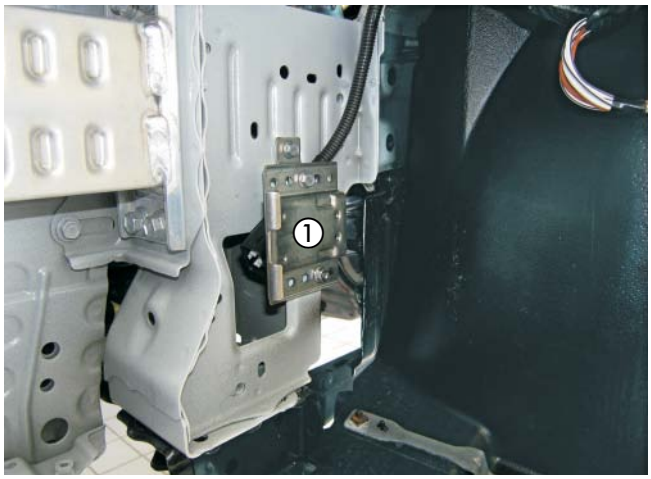

Photo 14

① Unit holder, mounted

Install heater
(see photo 15)

Insert the heater in the unit holder and, together with the holder (90° angle bracket 20 1348 03 0002), fix in the bottom threaded hole using the screw M6 x 95 screw with $6^{+0.5}$ Nm.

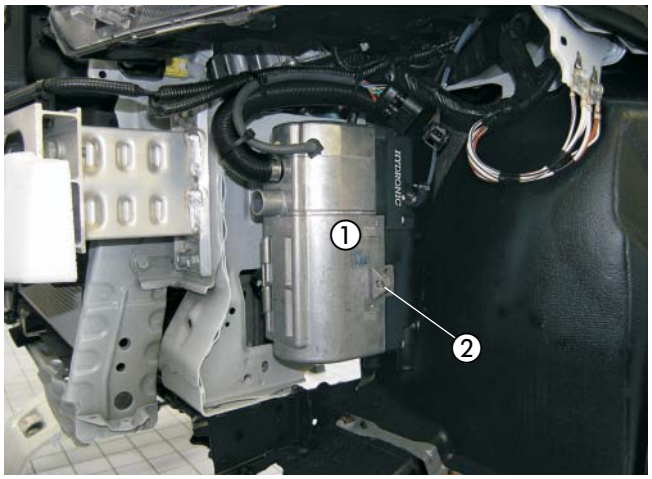

Photo 15

① Heater, installed
② Holder (90° angle bracket 20 1348 03 0002)

Install and connect exhaust silencer
(see photo 16)

Use a screw M6 x 16 to fix the exhaust silencer to the holder (90° angle bracket 20 1348 03 0002) as shown in the photo.

Use a pipe clamp to connect the exhaust pipe to the outlet connection of the heater.

Route the exhaust end pipe through the exhaust grommet as shown in the photo.

Please note!

When laying the exhaust pipes, ensure they are at a sufficient distance from adjacent body components.

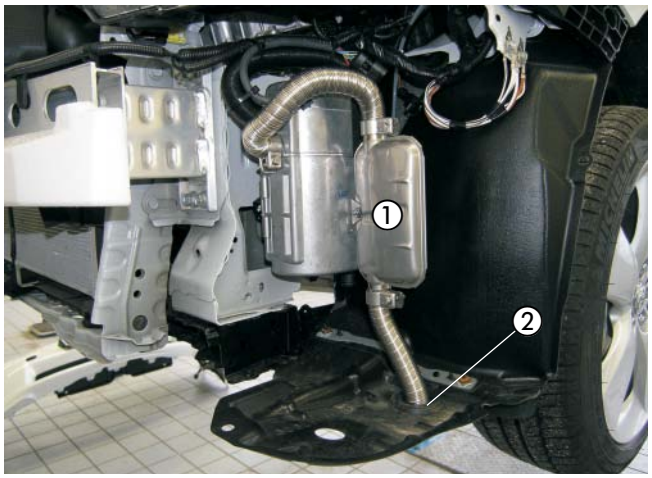

Photo 16

① Exhaust silencer, installed
② Exhaust end pipe, passed through the grommet

Laying the combustion air pipe
(see photo 17)

Lay the combustion air pipe in the bend to the left, in the protected area in front of the high-voltage rechargeable battery.
Use cable ties to fix the combustion air pipe in suitable places.
Make a drain hole Ø 2 mm for condensation at the lowest point of the laid combustion air pipe.

Please note!

Lay the combustion air pipe so that only clean, dry combustion air can be drawn in through the heater.



Photo 17

① Combustion air pipe

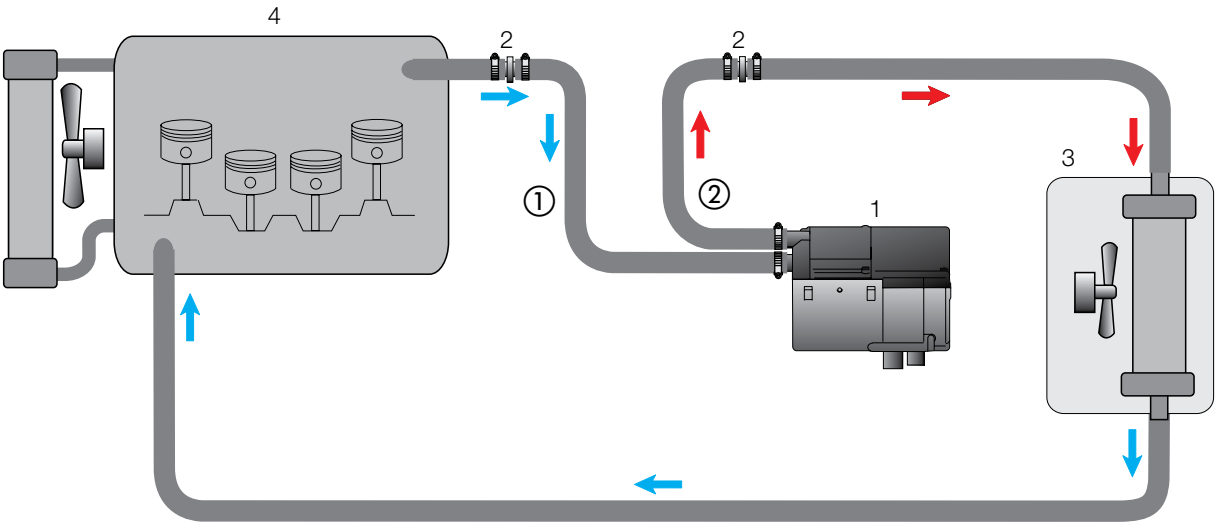

1 - Heater
2 - Connection pipe, 18 mm Ø
3 - Vehicle heat exchanger
4 - Engine
- Hose clip, 20 – 32 mm Ø

Diagram 5

Cut water flow hose
(see photo 18)

Cut the water flow hose from the engine to the heat exchanger (the bottom water hose at the heat exchanger) according to the dimensions, measured from the 90° bend.

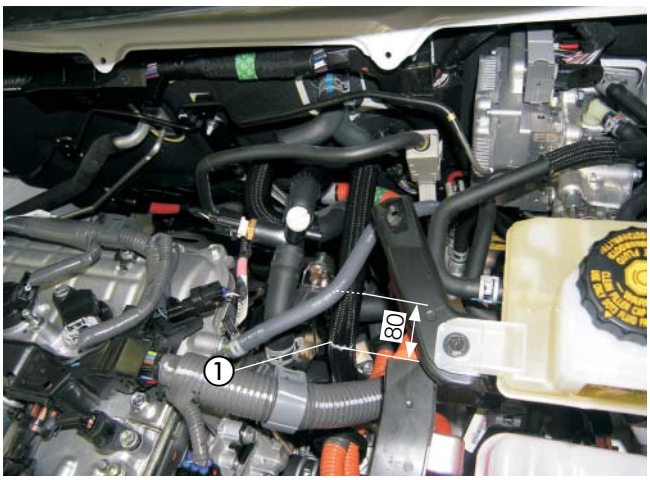

Photo 18

① Cutting point in the water flow hose

Lay and connect water hoses
(see photos 19 to 21 and diagram 5)

Connect the water hose ① to the water inlet connection of the heater.

Connect the water hose ② to the water outlet connection of the heater.

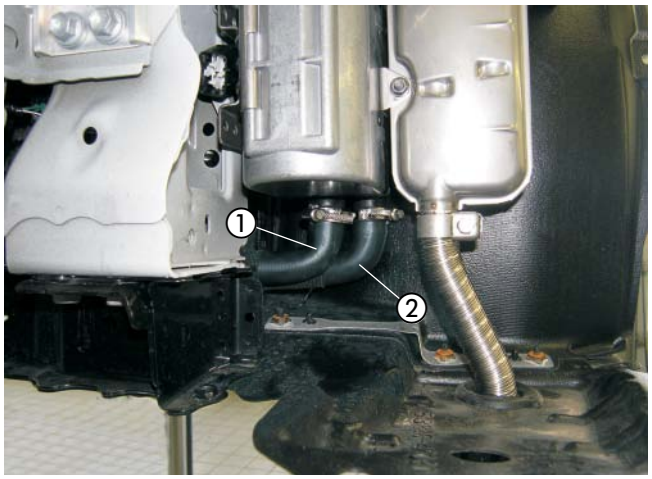

Photo 19

① Water hose ①
② Water hose ②

Lay the water hoses ① and ② in the bend up to the cutting point.

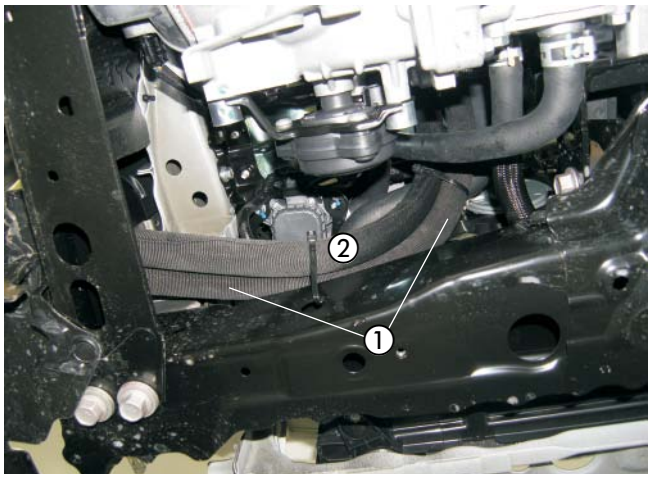

Photo 20

① Water hose ①
② Water hose ②

Connect the water hose ① with the 180! bend with the connection pipe, Ø 18 mm, to the water flow hose section from the engine.

Connect the water hose ② with the connection pipe, Ø 18 mm, at the water flow hose section to the heat exchanger.

Use cable ties to fix the water hoses ① and ② to each other.

Please note!

Secure all hose connections with hose clips.
Protect the water hoses against chafing and use cable ties to secure in suitable positions.

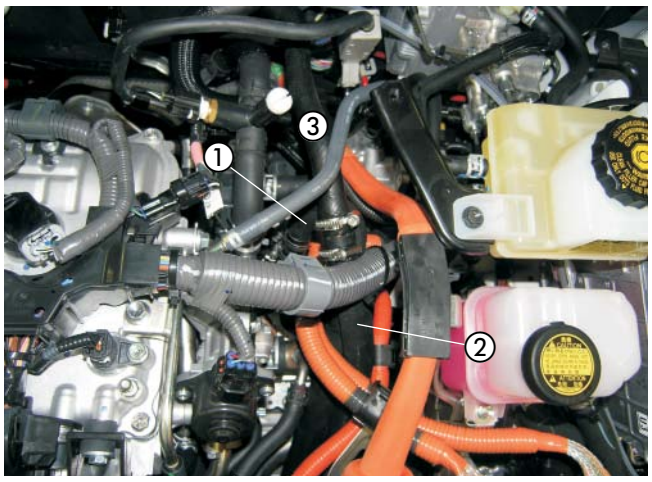

Photo 21

① Water hose ①
② Water hose ②
③ Water flow hose section to the heat exchanger

Install fuel tank extractor
(see photos 22 to 24)

Loosen the plug-in connection and the fuel line at the tank connection.
Remove the tank fitting from the tank opening by loosening the universal nut.

Make a drillhole Ø 8 mm, in the top part of the tank fitting according to the embossing.
Guide the fuel tank extractor through the prepared hole, screw tight with the M8 nut and align as shown.

Please note!

The tank fitting should not be removed for longer than 10 minutes because of expansion of the tank!

Please note!

When drilling, ensure that no dirt gets into the tank or supply lines.

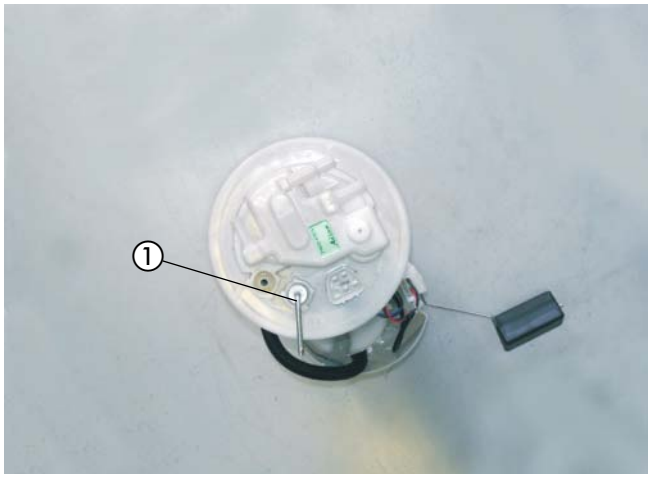

Photo 22

① Fuel tank extractor, installed

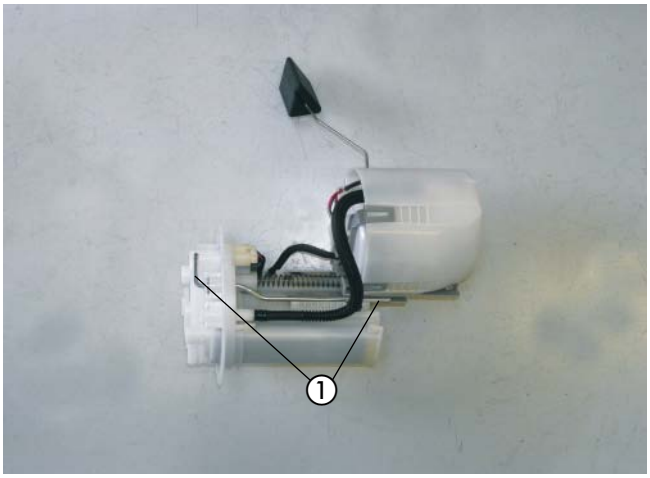

Photo 23

① Fuel tank extractor, installed

Insert the tank fitting back into the tank and fasten with the locking ring; ensure the seal fits properly.
Reconnect the plug-in connection and the fuel line at the tank fitting.

At the intake connection of the fuel tank extractor, connect the fuel pipe Ø 4 x 1 mm, with fuel hose, Ø 3.5 x 3 mm, length 50 mm, and lay up to the installation position of the metering pump on the left behind the tank.

Secure the connection points with 9 mm Ø hose clips.
Put the cover back over the tank.

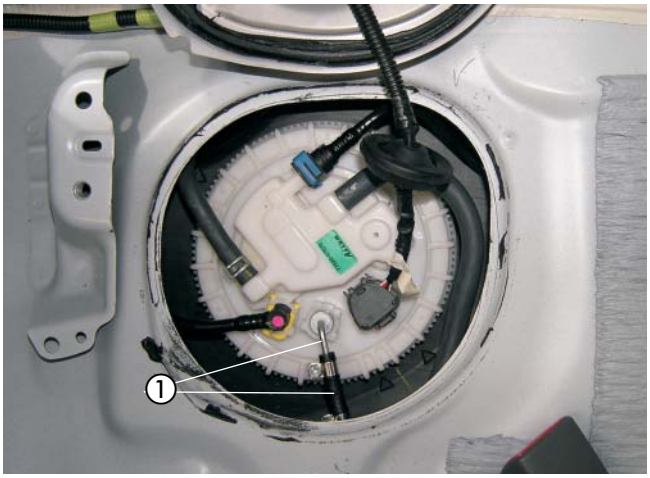

Photo 24

① Fuel tank extractor, connected

Install and connect the metering pump
(see photos 25 and 26)

Fix the preassembled metering pump with the holder (90° angle bracket 9501) at the existing screw M10 at the tank retaining strap, on the left in front of the tank.
Ensure it is installed with at least 15° rising gradient on the discharge side.
The discharge connection of the metering pump points upwards to the right.

Cut the fuel pipe, Ø 4 x 1 mm, from the fuel tank extractor to the metering pump to the required length and connect with fuel hose, Ø 3.5 x 3 mm, length 50 mm, to the discharge connection of the metering pump.

Remove the mating connector of the metering pump connection at the main cable harness.
Remove the dummy plugs from the mating connector.
Plug the connector of the supplied metering pump cable into the metering pump connection of the main cable harness.

Lay the fuel pipe Ø 4 x 1.25 mm together with the metering pump cable along the vehicle's fuel lines on the left underside of the vehicle up to the metering pump.
Cut the fuel pipe, Ø 4 x 1.25 mm, connect to the discharge connection of the metering pump and fix with cable ties.

Slot the plug-in contacts of the metering pump cable into the mating connector regardless of polarity.
Connect the connector to the metering pump.

Please note!

Use a sharp knife to cut the fuel pipe to length.
Secure all hose connections with hose clips.
When laying fuel lines, always ensure they are at an adequate distance from hot vehicle and heater parts.

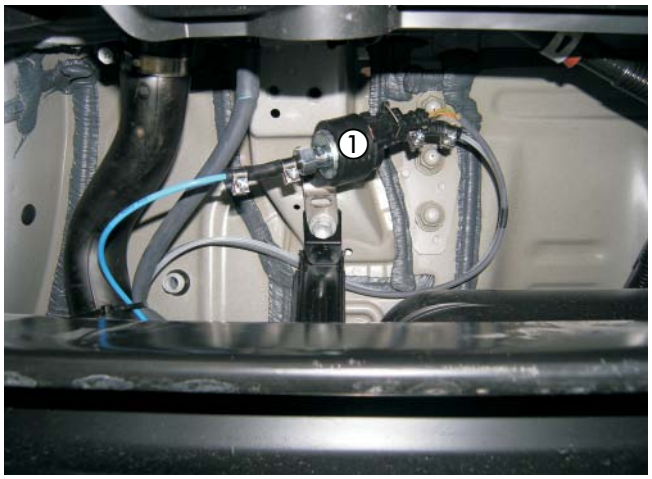

Photo 25

① Metering pump, with holder (90° angle bracket 9501), mounted

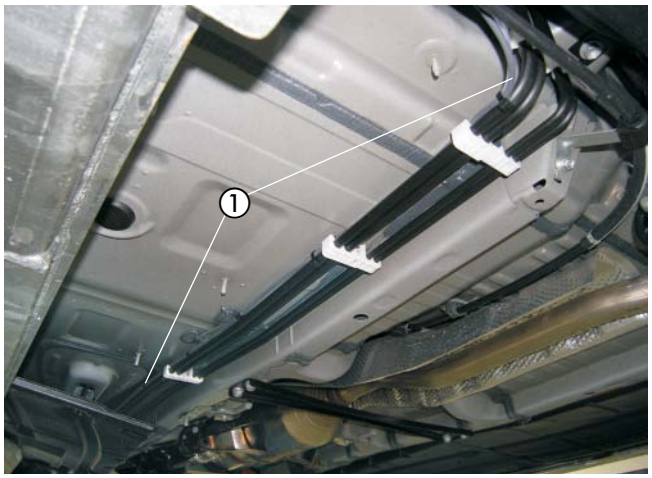

Photo 26

① Fuel pipe, Ø 4 x 1.25 mm, and metering pump cable, laid along the fuel lines

Install fuses and fan relay
(see photo 27 and diagram 6)

Mount the holder for the fuse and relay block at the existing elongated hole, Ø 6 mm, in the holder of the left headlamp.

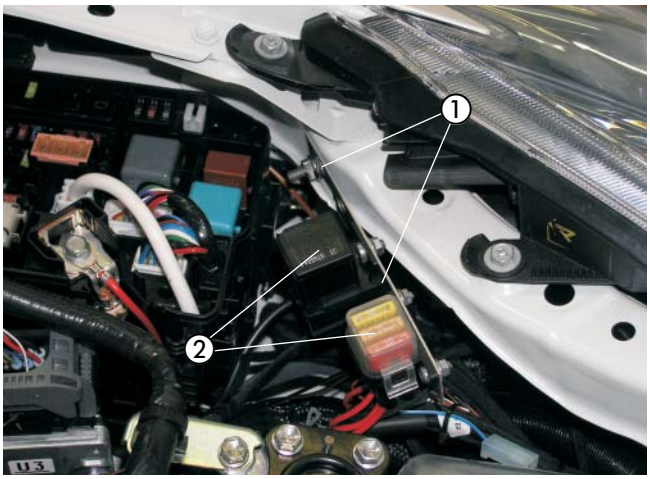

Photo 27

① Holder for fuse and relay block, installed
② Fuses and fan relay

Latch cable 0.5 mm² br of the main cable harness into the slot of terminal 2 (85) of the relay block.

Connect the 8 pin connector of the main cable harness with the 8 pin flat connector housing of the heater's cable loom.

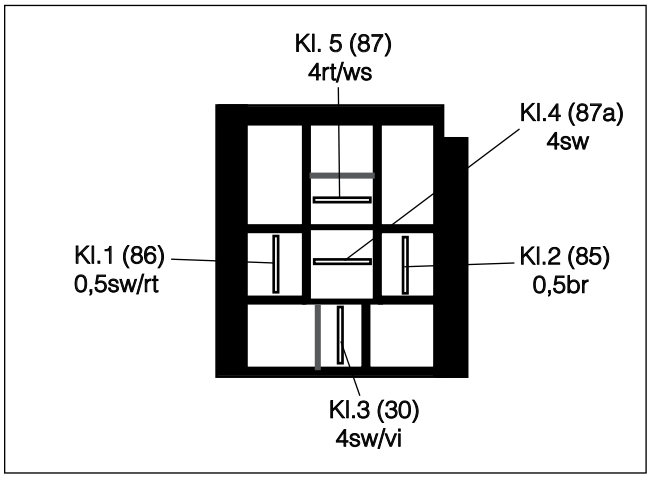

Diagram 6

View of the relay block from the cable inlet side

Cable laying
(see photo 28)

Lay the "control unit" and "fan control" cable looms through the vehicle's cable grommet on the right side of the engine partition into the interior of the vehicle.

Please note!

When laying the cable looms, ensure they are at an adequate distance from hot vehicle and heater parts.
Use cable ties to fix the cable looms in suitable places.



Photo 28

① Vehicle's cable grommet

Fan control
(see photos 29 to 32 and diagram 7)

Make a drillhole, Ø 5.5 mm, in the plastic strut behind the glove compartment, as shown in the photo.

Mount the connector block of the additional relay and the IPCU module in the hole made using a screw M5 x 12 and insert the IPCU module in the connector block.

Fix the cable 1 mm² br from the connector block of the IPCU module to the existing screw M6, as shown in the photo.
Lay the cable 1 mm² sw/rt of the connector block for the IPCU module base from the inside of the vehicle, through the cable grommet and into the engine compartment.

Please note!

Take care to ensure the A and E connections at the IPCU module are not mixed up/reversed.
This could irreparably damage the vehicle's electronics.

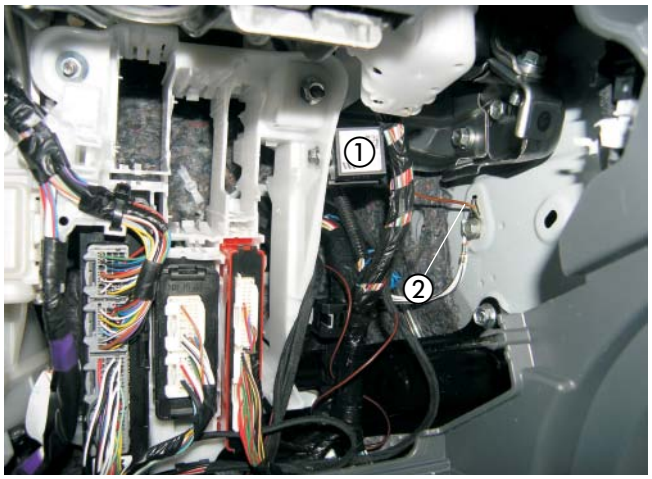

Photo 29

① IPCU module
② Earth cable 1mm² br, connected

Cut the cable 0.5 mm² rt at chamber 1 in the base of the flow relay, on the left next to the glove compartment.

Attach the cable 4 mm² sw and cable 1 mm² rt/ws from the connector block of the IPCU module into a joint bushing connector.

Tie in cables 4 mm² sw, 1 mm² rt/ws and 4 mm² sw/vi with plug-in connectors, as shown in the circuit diagram.

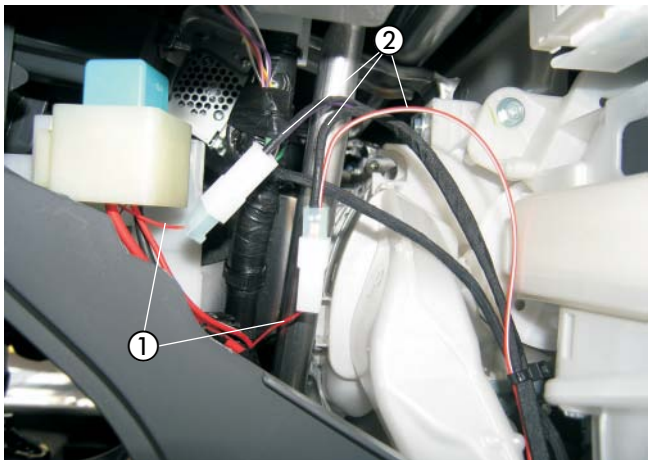

Photo 30

① Cable 0.5 mm² rt, disconnected
② Cables 4 mm² sw, 1 mm² rt/ws and 4 mm² sw/vi, tied in

Disconnect the cable 0.35 mm² bl (PIN 2) at the 3 pin black connector of the A/C amplifier and tie in the cables 1 mm² sw and 1 mm² sw/ws of the connector block of the IPCU module with the butt-type connectors, 0.5 - 1.5 mm², as shown in the circuit diagram.

Please note!

When laying the cable looms, ensure they are at an adequate distance from hot vehicle and heater parts.
Use cable ties to fix the cable looms in suitable places.

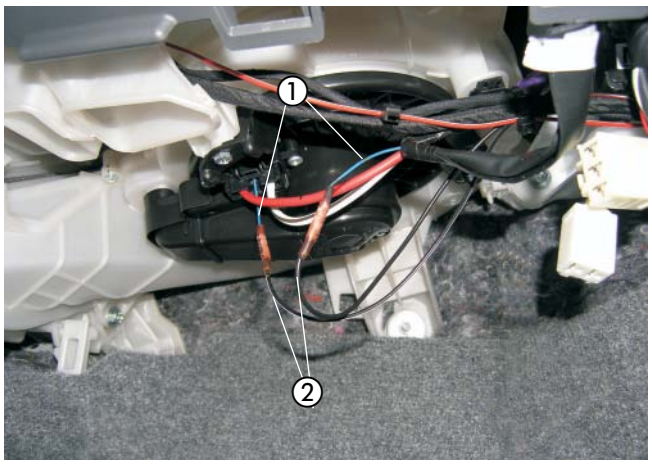

Photo 31

① Cable 0.35 mm² bl, disconnected
② Cables 1 mm² sw and 1 mm² sw/ws, tied in

Disconnect the cable 0.35 mm² sw (PIN 1) at the 40 pin, white connector at the A/C amplifier and tie in the diodes with butt-type connectors, 0.5 - 1.5 mm², as shown in the circuit diagram.

Attach the cable 1 mm² sw/rt from the connector block for the IPCU module, 1 mm² sw/rt from the diode and 0.5 mm² sw/rt from the main cable harness, together, in a new bushing connector and latch into slot 86 of the relay block.

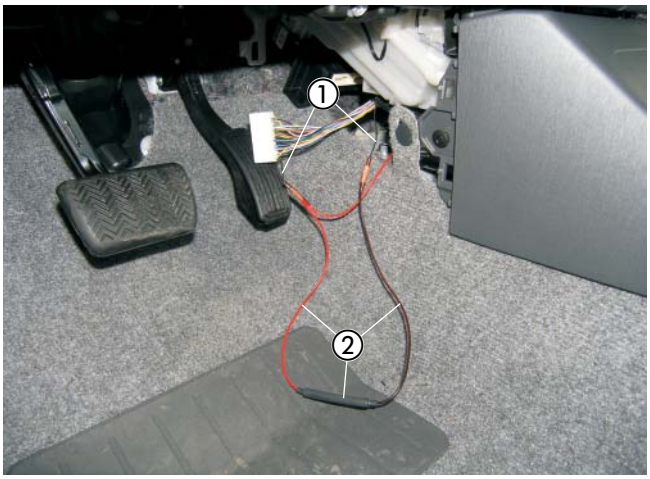

Photo 32

① Cable 0.35 mm² sw, disconnected
② Diode, tied in

Power supply
(see photos 33 and 34)

Route the positive cable 4 mm² rt to the electric box on the left-hand side of the vehicle and connect with cable lug A6 at the positive wiring point.



Photo 33

① Positive cable

Route the negative cable 2.5 mm² br to the left-hand MacPherson strut tower and connect to the earthing point with the cable lug A6.

Please note!

When laying the cable looms, ensure they are at an adequate distance from hot vehicle and heater parts.
Use cable ties to fix the cable looms in suitable places.

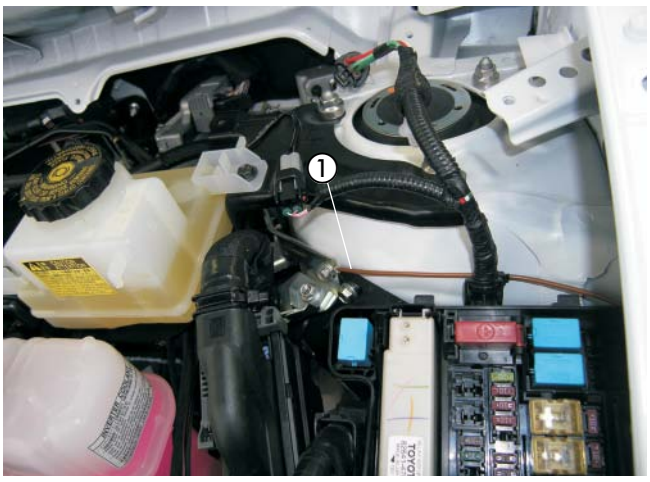

Photo 34

① Negative cable

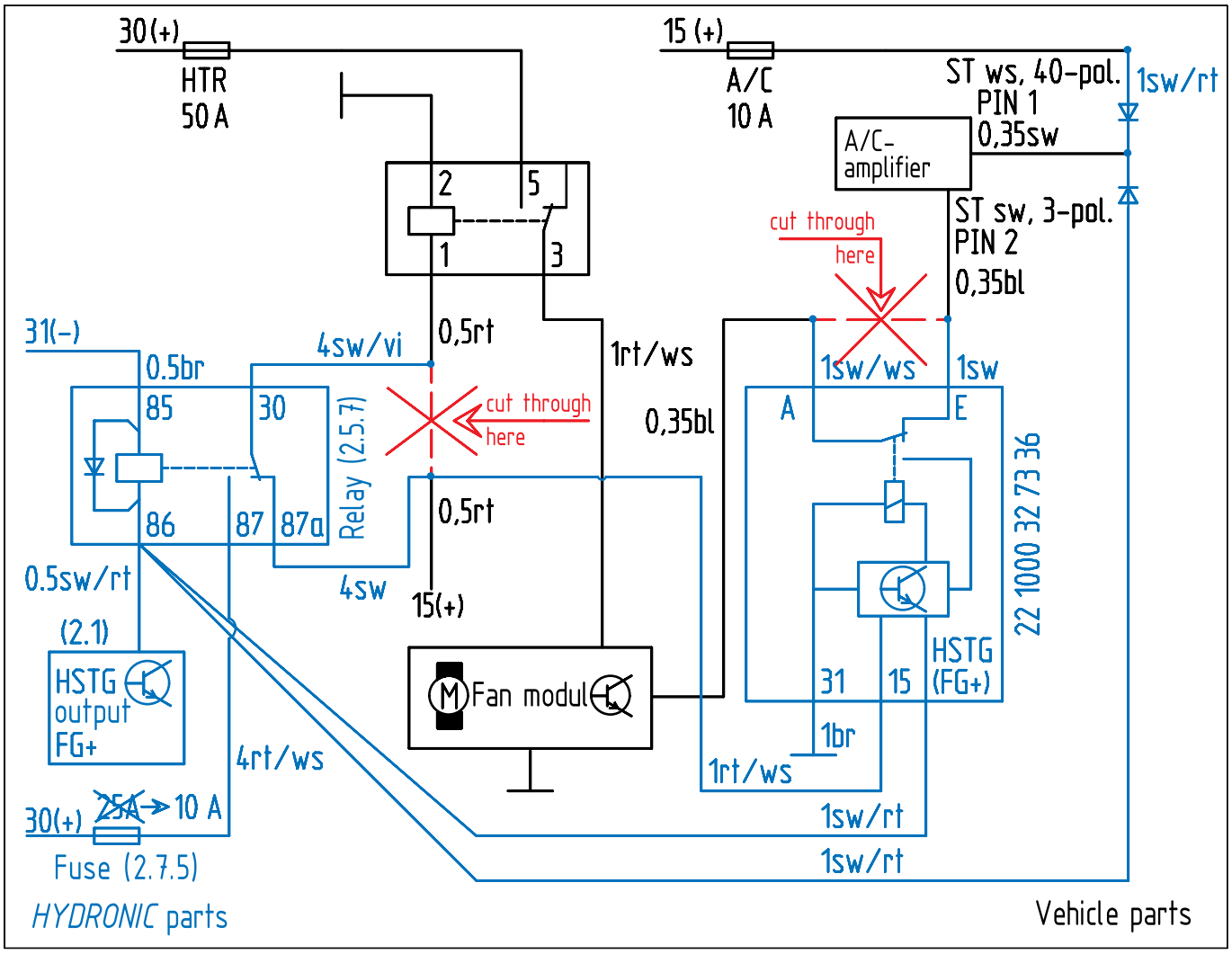
30(+)
HTR
50 A
15 (+)
A/C
10 A
ST ws, 40-pol.
PIN 1
0,35sw
1sw/rt
A/C-
amplifier
ST sw, 3-pol.
PIN 2
0,35bl
cut through
here
2
5
1
3
31(-)
0.5br
4sw/vi
0,5rt
1rt/ws
1sw/ws
1sw
85
30
86
87
87a
Relay (2.5.7)
cut through
here
0,35bl
A
E
0,5rt
0.5sw/rt
4sw
15(+)
22 1000 32 73 36
(2.1)
HSTG
output
FG+
Fan modul
31
15
HSTG
(FG+)
1br
4rt/ws
1rt/ws
30(+)
25A → 10 A
1sw/rt
Fuse (2.7.5)
1sw/rt
HYDRONIC parts
Vehicle parts

Diagram 7

Install EasyStart T
(see photo 35)

The EasyStart T is installed according to the "EasyStart T" installation instruction.

Mount the EasyStart T timer with the console onto the trim on the left next to the steering column trim.

Align the console on the mounting surface and trace the drillholes onto the mounting surface.
Make the drillholes Ø 3 mm and Ø 8 mm.
Remove the drilling template after making the holes.
Fix the console using the retaining screws B 3.5 x 19 supplied.

Guide the "control" lead harness through the hole Ø 8 mm and use the expansion plug to pre-install the timer in the hole, Ø 6.5 mm.
Push or screw the retaining screw into the expansion plug and use it to fix the timer.

Slot the flat connector from the "Control unit lead harness into the 9 pin flat connector housing, the already installed push-on sleeves into the push-on sleeve housing.
Push the fuse clasp into the flat connector housing.
Pull off the protective film of the cover cap and glue in the cover cap.

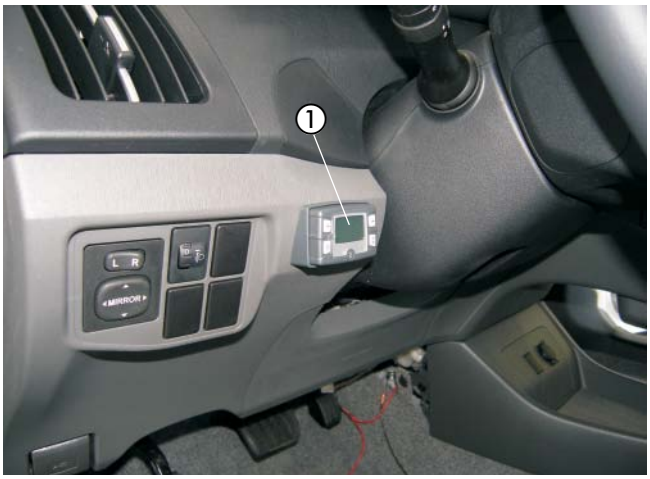

Photo 35

① EasyStart T

Please note!

Do not decide on the installed location of the timer until after consulting the customer.

Install EasyStart R/R⁺ radio remote control (Alternative suggestion - consult with the customer)
(see photos 36 and 37)

The EasyStart R/R⁺ is installed according to the Technical Description for the EasyStart R/R⁺ Radio Remote Control; see the "Installation Instructions" section.

Mount the button of the EasyStart R/R⁺ to the trim on the left next to the steering column trim.
To do so, make a drillhole, Ø 8 mm, and insert the button into the hole.

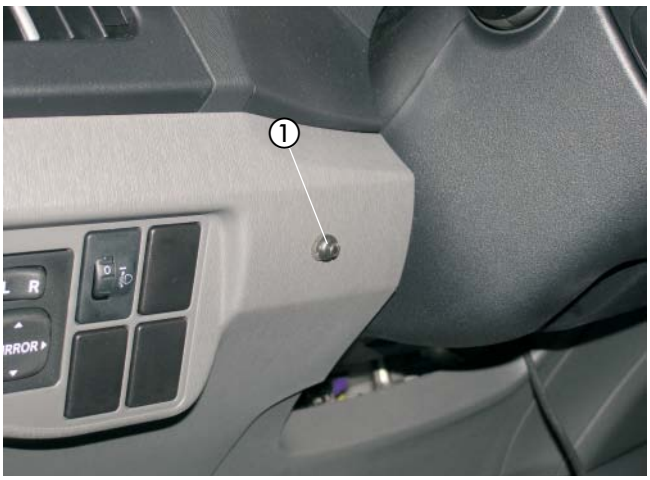

Photo 36

① Button of the EasyStart R/R⁺

4 Installation

Mount the stationary part of the EasyStart R/R+ with the holder on the right next to the glove compartment, as shown in the photo, to the A pillar using existing screw M8.

Attach the temperature sensor of the EasyStart R/R+ to the trim of the A-pillar in the driver's footwell.

Connect the antenna cable of the EasyStart R/R+ to the stationary part, guide to the right and lay in the rubber door seal on the passenger side.

Lay the cables from the installed button and temperature sensor together with the "Control" cable loom to the installed position of the stationary part and connect to the stationary part.

Please note!

Avoid contact with metal parts at the uninsulated end of the antenna cable.
Use cable ties to fix any excessive length of antenna cable underneath the instrument panel.

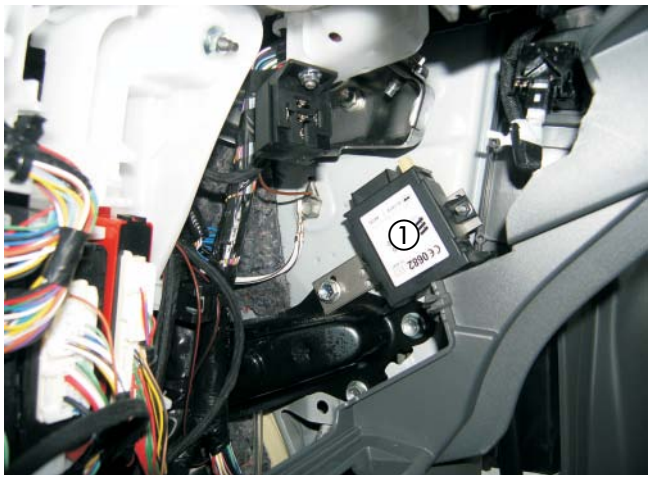

Photo 37

① Stationary part of the EasyStart R/R+

5 Following installation

Complete the vehicle

- Install all removed parts in the reverse order.
- Reconnect the battery.
- Check that the hoses, hose clips and pipe clamps as well as all electrical connections are fitted securely.
- Use cable ties to secure all loose cables, lines, etc.
- Set the clock time.
- If necessary, enter the radio code.
- Start the engine, vent the cooling system and check for leaks, top up any missing coolant liquid up to the marking (arrow).
- Please also note and follow the vehicle manufacturer's information on filling and venting the cooling system.
- Read and observe all official regulations and safety instructions in the Technical Description.
- Program the control and place the Operating Instructions together with the leaflet for the customer in the glove compartment.

Please note!

Fill the cooling system only with the coolant liquid specified by the vehicle manufacturer.

Starting up the heater

- Switch on the heater at the control unit. See Operating Instructions - Control.

6 Parts Overview

Item	Designation	Quantity	Order number
1	Vehicle-specific installation kit		24 8496 00 00 00
	Heater holder, new	1	
	Hexagon screw M6 x 95	1	
	Cable harness, heater	1	
	Fuse holder	1	
	Exhaust silencer	1	
	Exhaust pipe, L = 300 mm	1	
	Moulded hose, Ø 18 mm	1	
	Hose clip, Ø 16 - 25 mm	1	
	Hose clip, Ø 20 - 32 mm	6	
	Pipe clamp, Ø 26 - 28 mm	3	
	Metering pump holder	1	
	Lead harness, metering pump	1	
	Fuel hose, Ø (3.5 x 3) mm, L = 50 mm	3	
	Hose clip, one-piece with clamping jaws	6	
	Fuel pipe, Ø (4 x 1) mm	2 m	
	Fuel pipe, Ø (4 x 1.25) mm	5 m	
	Cable strap, (2.5 x 100) mm	10	
	Cable strap, (5.0 x 200) mm	20	
	Cable tie, with internal toothing	5	
	Hexagon screw M4 x 16	2	
	Hexagon nut M4	2	
	Hexagon screw M5 x 10	1	
	Hexagon nut M5	1	
	Hexagon screw M6 x 16	5	
	Hexagon screw M6 x 20	1	
	Hexagon nut M6	6	
	Holder, Z bracket	1	
	90° angle bracket	1	
	90° angle bracket	1	
	R+ holder	1	
	Body washer B6.4	2	
	Blind rivet nut M6	1	
	Hexagon screw M5 x 10	1	
	Hexagon nut M5	1	
	Hexagon screw M4 x 16	2	
	Hexagon nut M4	2	
	Bushing connector, 1.5 mm^2	1	
	Flat connector, 1.5 mm^2	1	
	Bushing connector, 4 mm^2	1	
	Flat connector, 4 mm^2	1	
	Bushing connector, 2.5 mm^2	1	
	Exhaust pipe	0.25 m	
	Exhaust grommet	1	
	Heat-shrink fit hose, Ø 40/20 mm	2 m	
	Connection pipe, Ø 18 mm	3	
	Clamp, Ø 20-32 mm	2	
	180° bend, Ø 18 mm	1	
	Riser pipe, fuel tank extractor	1	
	Clamp, Ø 9 mm	2	
	Fuel hose, Ø 3.5 x 3 mm	0.05 m	

6 Parts Overview

Item	Designation	Quantity	Order number
	"Manual" fan section	1	
	Relay	1	
	Flat connector housing	2	
	Push-on sleeve housing	2	
	Diodes, pre-wired	1	
	IPCU base, pre-wired	1	
	IPCU	1	

Before switching on
(see photo 1)

- Before switching on or pre-programming the heating mode with the ignition switched on, set the vehicle's temperature at button ① to "HI" (maximum setting).
- Set the button for the air system ② to maximum air flow for the windscreen.
- The fan speed does not need to be pre-selected.



Photo 1

① Button for the temperature setting
② Button for the air system